辽冶矿产集团
LMM GROUP

Airport Equipment & Systems

Quality Policy

Based on humanity management,
dedicating itself to provide customers
with
economic products & perfect service.

MINERAL & METALLURGY GROUP CO., LTD.

Dalian City,China.

www.lmmgroupcn.com/www.lmmgroup.cn

辽冶矿产集团
LMM GROUP

Main Activities

R&D

- A history of over 50 years
- Mainly specialized in airport and aircraft technology
- 14 state-level awards and 200 special awards
- 16 experts enjoying government special allowance
- Mobile research station for post-doctors
- Over 300 patented technologies

Engineering products

- Over 1000 employees
- 200 million USD sales income in 2013
- Participated in over 60 new and expansion airport projects
- Involved in the construction of top 25 airports in China
- Over 20 overseas airport projects

Industrial Technology Support

- Air traffic control,
- Information Technology(IT),
- Airworthiness,
- Energy conservation and pollution reduction, etc.

Main Markets

Airport BHS

Public Information Guidance Signs

E-Pass

ATC Automation System

Airport ELV&IT Systems

Distributed Alarm System

www.pathrosrep.com pathros@pathrosrep.com Teléfono 241-3023

辽冶矿产集团
LMM GROUP

The largest single terminal building in the world

China Beijing T3

- Building area: 980,000 ㎡ + 340,000 square㎡
- More than 30 ELV&IT subsystems are designed by

Distribution Map

- ★ Aviation Safety Products
- ■ IT Products
- ◆ ATC Products
- ⬢ BHS Products
- ● Aerochemical Products
- ▲ General Aviation Products

LMM has participated the construction of top 15 airports in China

Chinese Airport Annual Passenger Throughput

2013-01-01 to 2013-12-31

Airport	Rank	Passenger Throughput		
		This year	Last year	Increase Decrease %
Total		754,308,682	679,772,088	11.0
Beijing Capital	1	83,712,355	81,929,352	2.2
Guangzhou Baiyun	2	83,712,355	48,309,410	8.6
Shanghai Pudong	3	47,189,849	44,880,164	5.1
Shanghai Hongqiao	4	35,599,643	33,828,726	5.2
Chengdu Shuangliu	5	33,444,618	31,595,130	5.9
Shenzhen Bao'an	6	32,268,457	29,569,725	9.1
Kunming Changshui	7	29,688,297	23,979,259	23.8
Xi'an Xianyang	8	26,044,673	23,420,654	11.2
Chongqing Jiangbei	9	25,272,039	22,057,003	14.6
Hangzhou Xiaoshan	10	22,114,103	19,115,320	15.7
Xiamen Gaoqi	11	19,753,016	17,354,076	13.8
Changsha Huanghua	12	16,007,212	14,749,701	8.5
Wuhan Tianhe	13	15,706,063	13,980,527	12.3
Urumqi Diwobao	14	15,359,170	13,347,188	15.1
Nanjing Lukou	15	15,011,792	14,001,476	7.2

Track Record
ELV&IT System

- Dispatching System for Directing Production of Xiamen GaoQi Int'l Airport
- Information Integration System of Qingdao LiuTing Int'l Airport
- Dispatching System for Directing Production and Flight Display System of Nanjing LuKou Int'l Airport
- ELV&IT System of Dalian ZhouShuiZi Int'l Airport
- Information Integration System of Zhengzhou XinZheng Int'l Airport
- Information Integration System, Flight Display System, Broadcasting System and Clock System of Urumqi DiWoBao Int'l Airport
- Information Integration System, Flight Display System and Broadcasting System of Changchun LongJia Int'l Airport
- Information Integration System and Flight Display System of Harbin TaiPing Int'l Airport
- Information System Integration and Technical Overall Charge of Jinan YaoQiangInt'l Airport
- Dispatching System for Directing Production of Guiyang LongDongBao Int'l Airport
- Information Integration System and Flight Display System of Yinchuan HeDong Airport
- ELV System of Shijiazhuang ZhengDing Airport...

BHS

- Automatic BHS of Hefei Xinqiao Int'l Airport
- BHS of Terminal of Qingdao Liuting Int'l Airport Phase III Expansion
- Automatic BHS of New Terminal of Tianjin Binhai Int'l Airport
- BHS of Reconstruction Project of Nanchang Changbei Int'l Airport
- Automatic BHS of Terminal T2A of Chongqing Jiangbei Int'l Airport
- Automatic BHS of Hefei Xinqiao International Airport
- Upgrading Project of Automatic BHS of Terminal T2B of Chongqing Jiangbei Int'l Airport
- BHS of Domestic Terminal of Phase II of Hangzhou Xiaoshan Int'l Airport
- Procurement and installation project of BHS of Reconstruction Project of Dalian Airport
- BHS Expansion Project of Taipa New Ferry Project in Macau
- BHS of Terminal Reconstruction Project of Luoyang Airport

ATC Automation System

- ATC Main automation systems in Nanjing, Harbin, Lhasa and Zhangjiajie, etc.
- STCA &MSAW upgrading projects of ATC radar terminal system (a total number of 14 systems, 33 testing systems in Harbin, Hohhot, Tianjin, Taiyuan, Xiamen, Qingdao, Nanjing, Ningbo, Fuzhou, Chongqing, Wuhan, Changsha, Zhanjiang and Urumchi)
- RVSM function upgrading project of the ATC automation system of CAAC (7 sets of system modification in Harbin, Dalian, Xiamen, Qingdao, Zhengzhou, Wuhan and Urumchi)
- ATC emergency system construction project of CAAC (17 systems in Harbin, Dalian, Tianjin, Taiyuan, Hohhot, Qingdao, Xiamen, Nanjing, Zhengzhou, Changsha, Wuhan, Zhanjiang, Guiyang, Chongqing, Kunming, Urumchi and Ningbo)
- Beijing-Taiyuan AIDC networking project
- ATC backup system construction project of CAAC , 18 air traffic control substations in Harbin, Dalian, Hohhot, Xiamen, Nanjing, Qingdao, Ningbo, Wuhan, Changsha, Zhengzhou, Tianjin, Taiyuan, Dalian, Urumchi, Chongqing, Kunming, Guiyang and Zhanjiang

辽冶矿产集团
LMM GROUP

Overseas Projects

SANAA Int' l Airport, Yemen

- Optimized design of electromechanical system of the Terminal
- Design and construction of sign system
- Design and consultation of electromechanical system

MAYAMAYA Int' l Airport, Congo (Brazzaville)

- General contract of ELV&IT system:
- Integration System
- Flight Information Display System
- CATV
- CCTV
- Clock System
- Departure System
- Automatic Broadcasting System
- Building Control System
- Access Control Management and Warning System
- Integrated Wiring System
- Parking Lot System
- Conference and Simultaneous Interpreting System
- Internal Communication System
- Security Check Information System
- ELV&IT Auxiliary System

MORONI Int' l Airport, Comoros

- General Technical Service of Terminal ELV&IT, Baggage Handling System
- Flight Information Display System
- CATV
- CCTV
- Clock System
- Automatic Broadcasting System
- Integrated Wiring System Internal Communication System
- Design and construction of Baggage Handling System

SANGSTER Int' l Airport, Jamaica

- Design and construction of Baggage Handling System

NEW LUANDA Int' l Airport, Angola

- Design and construction of Baggage Handling System
- Design of Terminal IT System

MAPUTO Int' l Airport, Mozambique

- Design and construction of Cargo Information System

BALEELA Airport, Sudan

- Construction of Baggage Handling System

KESUMU Airport, Kenya

- Design and construction of Baggage HandlingSystem

TAIPA Ferry Terminal, Macau

- Construction of Baggage Handling System

LUANGPROBANG Airport, Laos(in operation)

- General Contract of ELV&IT:
- Integration System
- FIDS
- CATV
- CCTV
- Clock System
- Departure System
- Public Address
- Integrated Wiring System
- Security Check Information System
- ELV& IT Auxiliary System

ZANZIBAR Airport, Tanzania (in operation)

- Design and construction of baggage handling system

Phase II, MAYAMAYA International Airport, Congo (Brazzaville)

- Design and construction of Baggage Handling System

CHEDDI JAGAN Airport, Guyana (in operation)

- Overall design and consultation

SIR SEEWOOSAUR RAMGOOLAM Airport, Mauritius (in operation)

- Taxiway and runway markings design and markings painting provision

OLLOMBO Int' l Airport, Congo(Brazzaville)

- Construction of Baggage Handling System

LOME Int' l Airport, TOGO (in operation)

- General contract of ELV&IT system:
- Flight Information Display System
- CATV
- CCTV
- Clock System
- Automatic Broadcasting System
- Building Control System
- Access Control Management and Warning System
- Integrated Wiring System
- Parking Lot System
- Internal Communication System
- ELV&IT Auxiliary System

LOME Int' l Airport, TOGO(in operation)

- Design and construction of Baggage Handling System

Agostinho Neto Int' l Airport, Congo (Brazzaville) (in operation)

- General contract of ELV&IT system:
- Flight Information Display System
- CATV
- CCTV
- Clock System
- Automatic Broadcasting System
- Building Control System
- Access Control Management and Warning System
- Integrated Wiring System
- Parking Lot System
- Internal Communication System
- ELV&IT Auxiliary System
- Design and construction of Baggage Handling System

ELV&IT Systems

Information Integration System (IIS)

Why IIS is needed?

- Various Data Format between systems for same information
- Information islands and hard to share information between systems
- Hard to interaction between systems
- Chimney-like Resource Management and Negatively Impact on Multiple Terminals? operation

What IIS do?

- To support multiple terminals? better operation
- For improved ground services
- Standardized data exchange interface to facilitate the interaction between systems
- General key operation events and workforce centralized monitoring and improving
- Test lab for new system and application verification and deployment

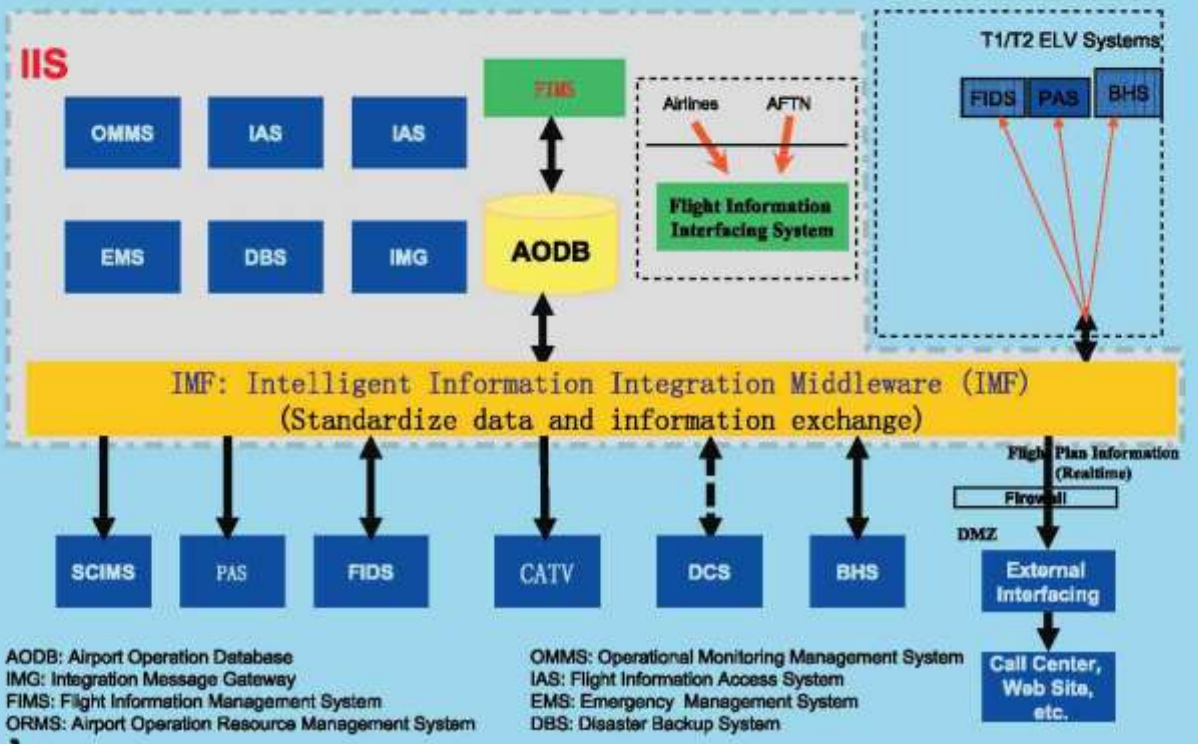

AODB: Airport Operation Database
IMG: Integration Message Gateway
FIMS: Flight Information Management System
ORMS: Airport Operation Resource Management System

OMMS: Operational Monitoring Management System
IAS: Flight Information Access System
EMS: Emergency Management System
DBS: Disaster Backup System

辽冶矿产集团
LMM GROUP

Flight Information Display System(FIDS)

Key Functions

- Departure and Arriving Flight status
- Check-In, Boarding information Distribution
- Notification and Reminder to Passengers and Staff
- Advertisement and other information Display

Display Rules

- Centralized Information Storage, Distribution and Management
- Multiple Level Controlled Information Input
- Information Display based on position and needs

Head-End Terminals

- Large Screen (e.g. LCD Screen)
- Strip Screen
- Normal Size Screen

Check-In Guidance
In Check-in Hall Area

Boarding Guidance
In Boarding Area

Baggage Claim Guidance
In Baggage Claim Area

Customized Language Display

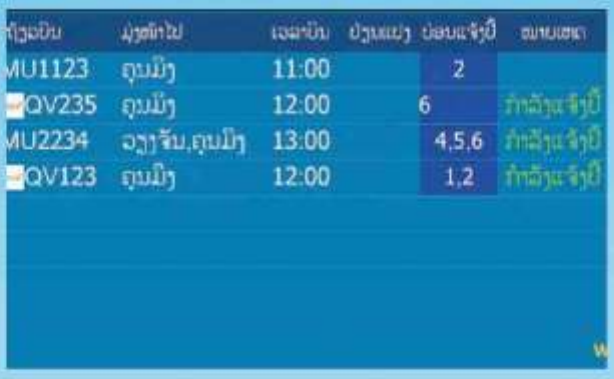

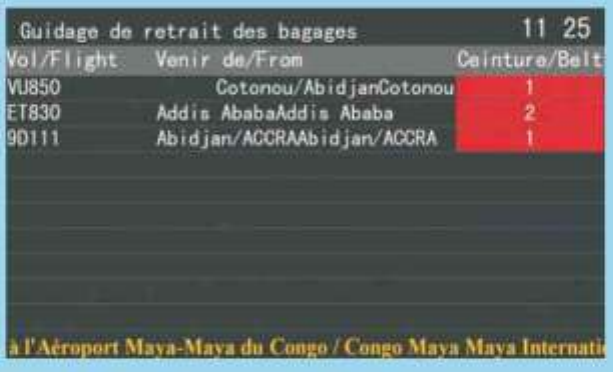

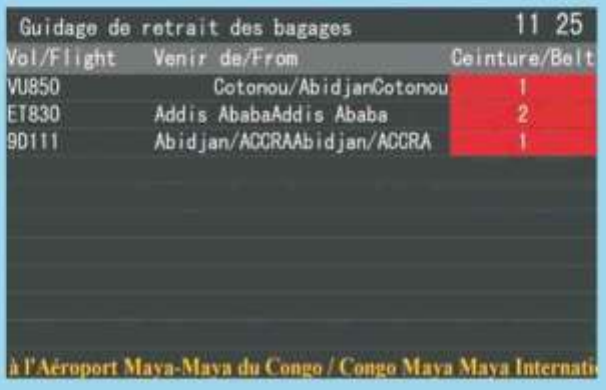

Public Address(PA)

Key Functions	Flight Information Announcement Fire and Other Event Announcement Background Music Other Notification and Statement
Key Tech	To Improved Voice Quality and Long-Distance Transmission: Distributed Digital Public Address Technology Dedicated Data Transmission Protocol: CobraNet
Multi-Languages Support	Local, National, and International Frequent used Language (e.g. Chinese, English, Spanish, French) Other Considerations


Automatic PA Rule Management


Equipment Outlook


Public Address Workstation


Device Management

Security Check Information Management System(SCIMS)

Goal	To storing, indexing and sharing comprehensive security check information to Security Check and Immigration departments
Key Functions	- Passenger On-site Photograph and Travel Document Image - Entire Security Check Process Recording - Suspicion Passenger Hold Up - Suspicion Handbag Re-check Recording - SC Information Indexing, Query and Statistics - Staff Authentication Information Management, Shift Arrangement, ?
Information Source	Take passenger and handbag SC process as the main line; Collect information over system interface with: - X-ray scanner: Handbag and Baggage Screening Image - Travelling Document Scanner: Travelling Document Image - DCS: passenger travelling information - IIS: flight information - Master Clock: Actual Time

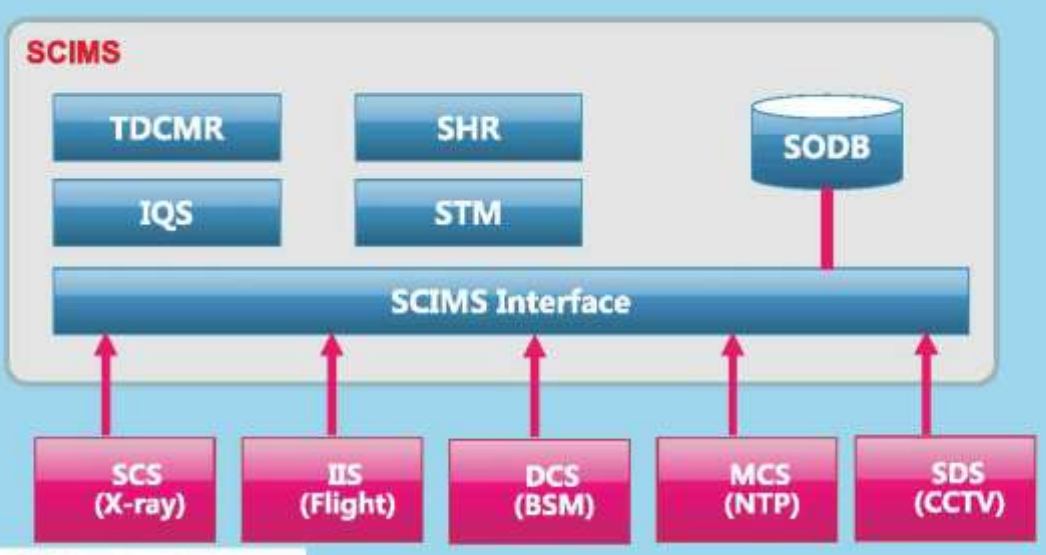

TDCMR: Travelling Document Checking Information Recording
SHR: Suspicion Handbag Re-check Information Recording
IQS: Information Querying and Statistics
STM: Staff Management (Shift Arrangement, Staff Authentication Information Management, ...)

Master Clock

To provide Accurate time to ALL devices for time **synchronization**

To show Accurate World Wide cu rrent time to passengers and staff

To eliminate any potential risks which may cause any confusion

One sources, one references

Master Clock Subsystems

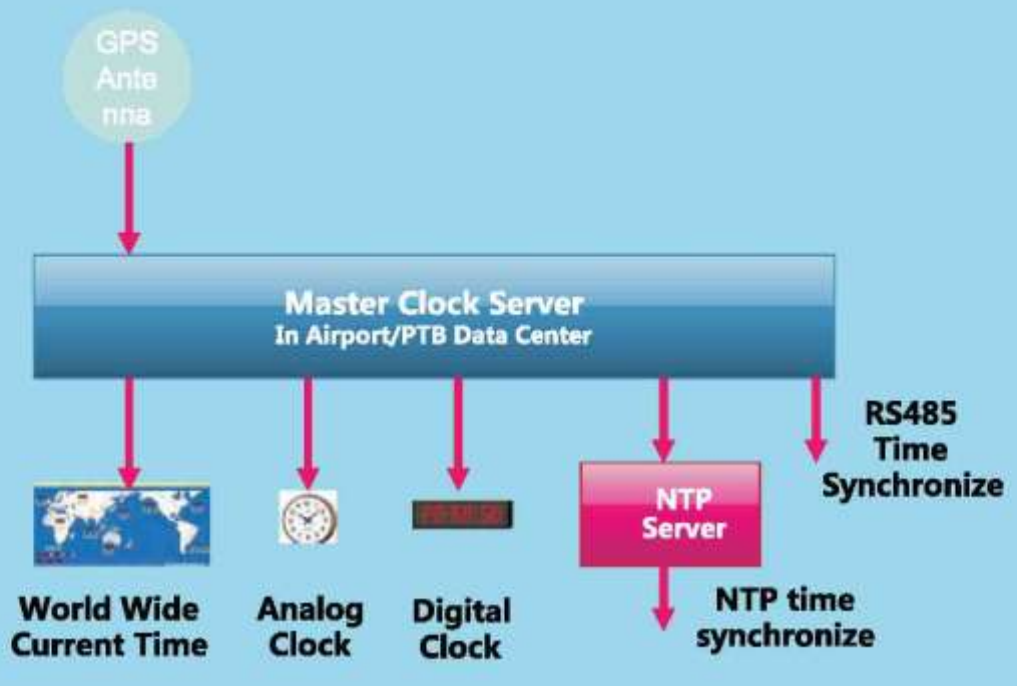

Air Traffic Control

ATC Automation System

System Configuration
Small-size ATC Automation System

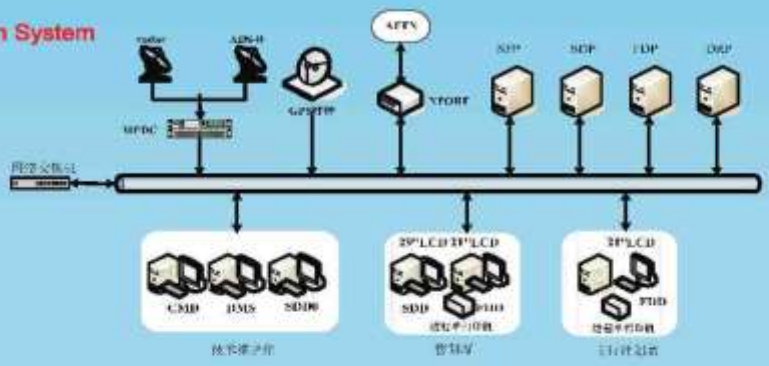

14 systems applied in small-sized civil airports in China

System Configuration
Medium-size ATC Automation System

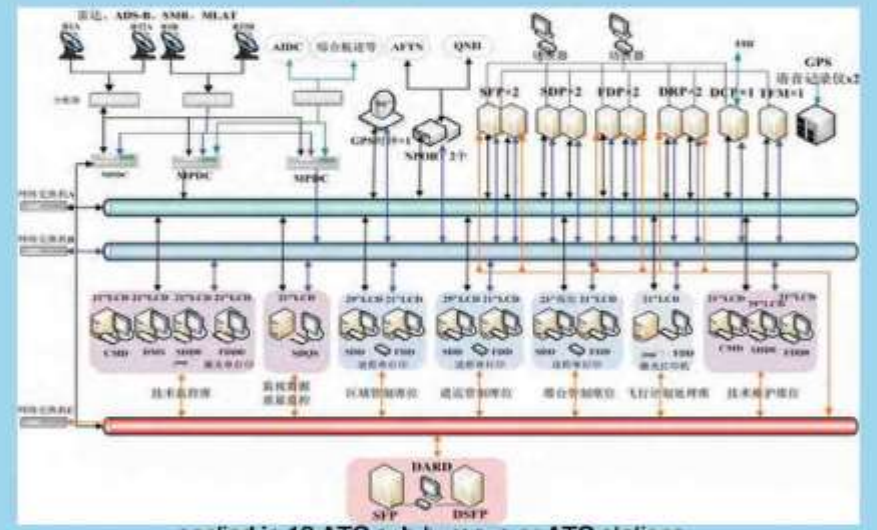

applied in 18 ATC sub-bureaus or ATC stations

System Configuration
Large Area Control Center Automation System

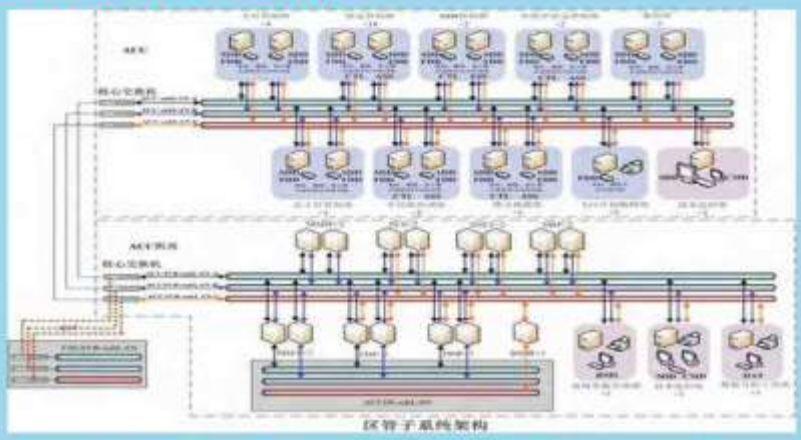

orientated to ACC,en-route control and union terminal management area.

辽冶矿产集团
LMM GROUP

Advance- Surface Movement Guidance and Control System(A-SMGCS)

System structure

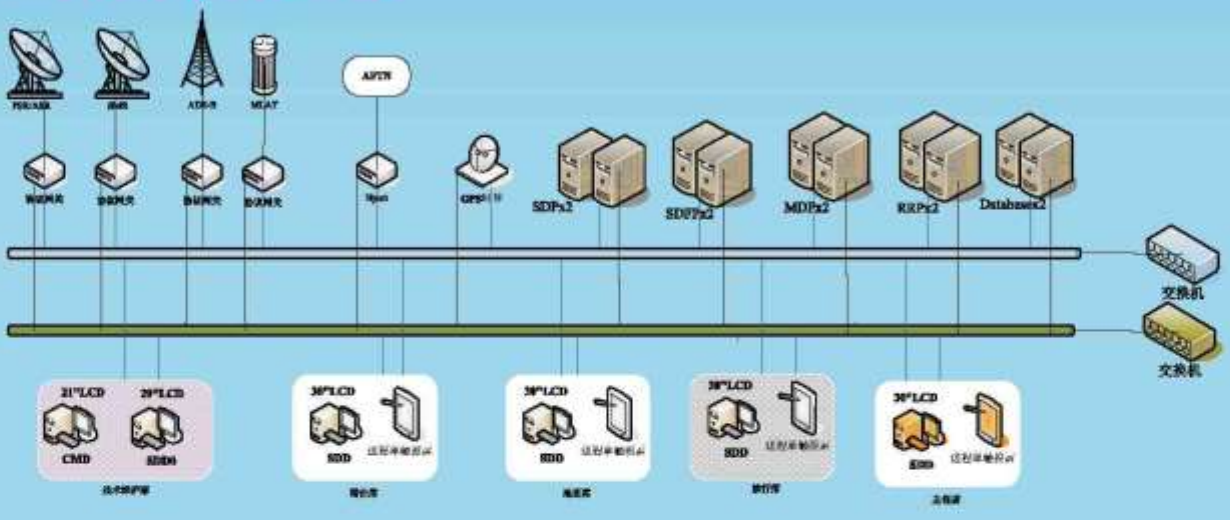

System Main Interface

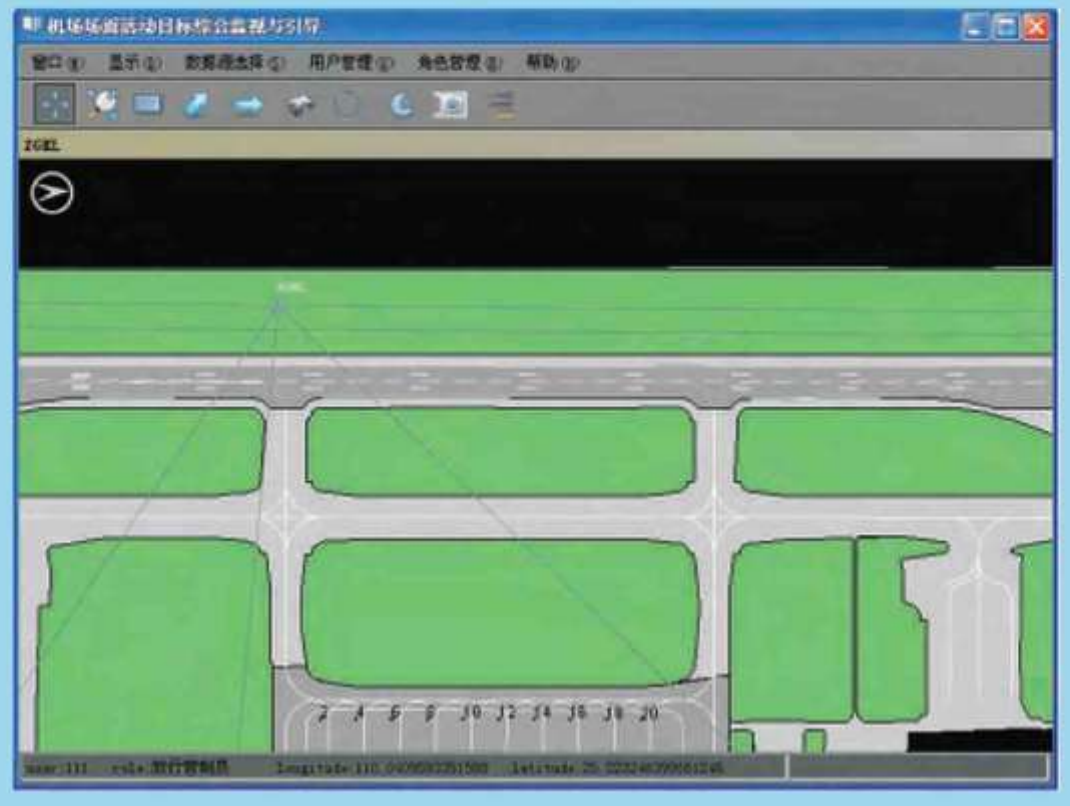

Automatic Dependent Surveillance_Broadcast（ADS-B）

System Structure

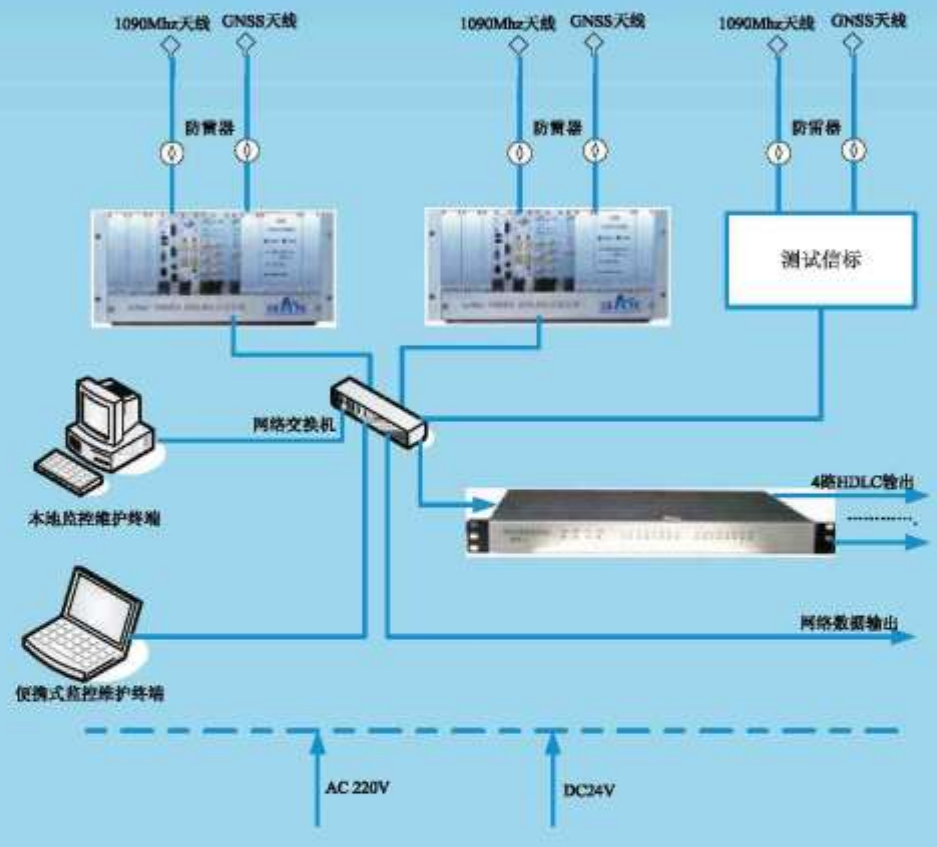

ADS-B receiver

辽冶矿产集团
LMM GROUP

Baggage Handling System

Security Check Conveyor

Model:BCW

Key Functions

- Connecting to the weighing conveyor
- Installed at the bottom of the security inspection machine
- Interlocking function when matched with the two-channel security inspection machine

System Features

- Low noise (not more than 65dB), supporting frequent starts and stops
- Matched with the products of domestic and international security inspection machine
- Stainless steel outer cover

Main technical parameters

Length of the conveyor (L):	1800mm to 3000mm (matching with the security inspection machine)	**Static load:**	150kg/m	**Side cover board:**	GB304
Height of the belt surface (H1):	330mm ~ 400mm (matching with the security inspection machine)	**Dynamic load:**	50kg/m	**Sliding bed board:**	Q235
Height of the whole machine (H2):	480mm ~ 650mm (matching with the security inspection machine)	**Head rolling drum:**	Φ60mm	**Connecting piece:**	Q235
Belt width (W1):	450mm~680mm (matching with the security inspection machine)	**Tail rolling drum:**	Φ60mm	**Plug pin:**	Q235
Side plate spacing:	480mm~720mm (matching with the security inspection machine)	**Tension rolling drum:**	Φ60mm	**Caster wheel seat:**	Q235
Conveyor width (W3):	600mm~840mm (matching with the security inspection machine)	**Electric rolling drum:**	Φ113mm	**Belt:**	Anti-skid, flame retardant and antistatic
Speed:	21m/min ~ 30m/min	**Side plate:**	GB304		
Noise:	(Ground clearance of 1m, 1m away from the sound source, environmental noise 50 dB(A)) ≤ 65dB(A)				

辽冶矿产集团
LMM GROUP

Baggage Handling System

Queuing Conveyor

Model:BCQ

Key Functions

- Arranged after weighing and security check conveyors
- Queuing for virtual window
- Conveying baggage to collecting conveyor automatically after window appears

System Features

- Low noise (not more than 65dB), supporting frequent starts and stops
- No additional operation
- Equal probability injection mechanism
- Stainless steel cover

Main technical parameters

Length of the conveyor (L):	1200mm ~ 3000mm	Static load:	150kg/m	Side cover board:	GB304
Height of the belt surface (H1):	330mm ~ 400mm	Dynamic load:	50kg/m	Sliding bed board:	Q235
Height of the whole machine (H2):	400mm ~ 650mm	Head rolling drum:	Φ60mm	Connecting piece:	Q235
Belt width (W1):	450mm~680mm	Tail rolling drum:	Φ60mm	Plug pin:	Q235
Side plate spacing(W2):	480mm~720mm	Tension rolling drum:	Φ60mm	Caster wheel seat:	Q235
Conveyor width (W3):	600mm~840mm	Electric rolling drum:	Φ113mm	Belt:	Anti-skid, flame retardant and antistatic
Speed:	21m/min ~ 30m/min	Side plate:	GB304		
Noise:	(Ground clearance of 1m, 1m away from the sound source, environmental noise 50 dB(A)) ≤ 65dB(A)				

辽冶矿产集团
LMM GROUP

Baggage Handling System

Collecting Conveyor

Model:BLC

Key Functions

- Conveying baggage to the next conveying unit at regular interval
- Based on grid window control technology
- Effectively avoiding baggage collision, improving conveying efficiency

System Features

- Low noise, stable starts and stops, reliable operation
- Modular structure
- Mature grid window control technology
- Stainless steel cover

Main technical parameters

Length of the conveyor (L):	Length in accordance with the actual configuration	Static load:	150kg/m	Driving motor:	Integral type reducing motor
Height of the belt surface (H1):	330mm - 400mm	Dynamic load:	50kg/m	Side plate:	GB304
Height of the whole machine (H2):	480mm - 800mm	Head rolling drum:	Φ102mm	End cover board:	GB304
Belt width (W1):	1000mm	Tail rolling drum:	Φ102mm	Sliding bed board:	Q235
Side plate spacing(W2):	1040mm	Tension rolling drum:	Φ102mm	Frame:	Q235
Conveyor width (W3):	1200mm	Driving rolling drum:	Φ180mm	Support leg:	Adjustable anti-vibration device
Speed:	30m/min - 60m/min	Carrier roller:	Φ60mm	Belt:	Anti-skid, flame retardant and antistatic
Noise:	(Ground clearance of 1m, 1m away from the sound source, environmental noise 50 dB(A)) ≤ 65dB(A)				

辽冶矿产集团
LMM GROUP

Baggage Handling System

Linear Conveyor

Model: BL H/U/D

Key Functions

- Used for baggage conveying in horizontal straight line section
- Customized length of linear conveyor

System Features

- Low noise, stable starts and stops, reliable operation
- Modular structure
- Connected with horizontal, vertical sorter, curve conveyor, etc.
- Up to 30 times per minute of start and stop rate

Main technical parameters

Length of the conveyor (L):	Length in accordance with the actual configuration	**Static load:**	150kg/m	**Driving motor:**	Integral type reducing motor
Height of the belt surface (H1):	400mm	**Dynamic load:**	50kg/m	**Side plate:**	Q235
Height of the whole machine (H2):	600mm ~ 800mm	**Head rolling drum:**	Φ102mm	**Sliding bed board:**	Q235
Belt width (W1):	1000mm	**Tail rolling drum:**	Φ102mm	**Frame:**	Q235
Side plate spacing(W2):	1040mm	**Tension rolling drum:**	Φ102mm	**Support leg:**	Adjustable anti-vibration device
Conveyor width (W3):	1200mm	**Driving rolling drum:**	Φ180mm	**Belt:**	Anti-skid, flame retardant and antistatic
Speed:	30m/min ~ 60m/min	**Carrier roller:**	Φ60mm		
Noise:	(Ground clearance of 1m, 1m away from the sound source, environmental noise 50 dB(A))≤65~75dB(A)				

辽冶矿产集团
LMM GROUP

Baggage Handling System

Diverter

Model: BS G/P/C

Key Functions

- Diverting baggage horizontally
- Equipped with an articulated swing arm belt conveyor
- No damage to baggage

System Features

- Low noise, stable starts and stops, reliable operation
- High-quality gear motor
- Up to 1,200 pcs/h of handling efficiency
- No more than 1s of swing arm movement cycle

Main technical parameters

Length of the diverter (L):	Length in accordance with the actual configuration	**Static load:**	150kg/m	**Driving motor:**	Integral type reducing motor
Height of the diverter (H):	1000mm	**Dynamic load:**	50kg/m	**Side plate:**	Q235
Width of the swing arm (W1):	≥260mm	**Sorting efficiency:**	1200 pcs/h	**Frame:**	Q235
Thickness of the diverter (W2):	400mm	**Cycle of swing arm movement:**	≤1sec		
Noise:	(Ground clearance of 1m, 1m away from the sound source, environmental noise 50 dB(A)) ≤ 70dB(A)				

辽冶矿产集团
LMM GROUP

Baggage Handling System

Plane Baggage Carousel

Model: BO–H

Key Functions

- Used for outbound baggage sorting or inbound baggage claim
- Conveying baggage back and forth
- Automatic alarming function
- Automatic shutdown when no baggage

System Features

- Low noise, stable starts and stops, reliable operation
- Advanced friction driving mode
- Stainless steel cover in public areas

Main technical parameters

Length (L);	In accordance with the actual configuration	**Speed:**	24m/min ~ 60m/min	**Side cover board:**	GB304/Q235
Length of the scale plate (W1):	1000mm	**Turning radius:**	1500mm	**Guard plate (alternative):**	GB304/Q235
Carousel width (W2):	1040mm	**Traction chain:**	cast aluminum , P=250mm	**Driving motor:**	Integral type reducing motor
Height (H):	350-400mm	**Guide wheel:**	Polyurethane outer layer, nylon skeleton	**Friction drive device:**	Elastic pressure roller assembly
Static load:	150kg/m	**Scale plate:**	Black rubber, flame retardant and antistatic	**Support leg:**	Adjustable anti-vibration device
Dynamic load:	100kg/m	**Frame:**	Q235		
Noise:	(Ground clearance of 1m, 1m away from the sound source, environmental noise 50 dB(A)) ≤ 65dB(A)				

LMM 辽冶矿产集团
LMM GROUP

Baggage Handling System

Inclined Baggage Carousel

Model: BO–I

Key Functions

- Used for outbound baggage sorting or inbound baggage claim
- Conveying baggage back and forth
- Automatic alarming function
- Automatic shutdown when no baggage
- Easy for sorting and pickup

System Features

- Low noise, stable starts and stops, reliable operation
- Advanced friction driving mode
- Options of rubber or stainless steel dissepiment according to client's preference

Main technical parameters

Length:	Per actual configuration	**Dynamic load:**	100kg/m	**Frame:**	Q235
Carousel width:	1240 mm-1480 mm	**Speed:**	24m/min — 30m/min	**Side cover platec**	GB304/Q235
Dissepiment length (W2):	1200mm	**Turning radius:**	Outer 1,500mm, interior 4,000mm	**Drive motor:**	Integral gear motor
Low-end height (Hl):	≤450mm	**Traction chain:**	Aluminum-casting parts, P=250mm	**Friction drive device:**	Elastic pressure roller assembly
High-end height (H2):	67 Smm-875mm	**Guide wheel:**	Polyurethane layer, nylon skeleton	**Support leg:**	Adjustable shockproof device
Static load:	150kg/m	**Dissepimen t:**	Black rubber/GB 304		
Noise:	≤65dB(A) (1m above the ground, 1 m from the sound source, environmental noise 50 dB(A))				

辽冶矿产集团
LMM GROUP

Baggage Handling System

Electric Control System

Model: BE

Key Functions

- Based on PLC control system
- Centralized electric control system
- Distributed electric control system

System Features

- Operation mode match user's preference
- High-quality components
- Patented tracking and automatic sorting control technology

Centralized Control System

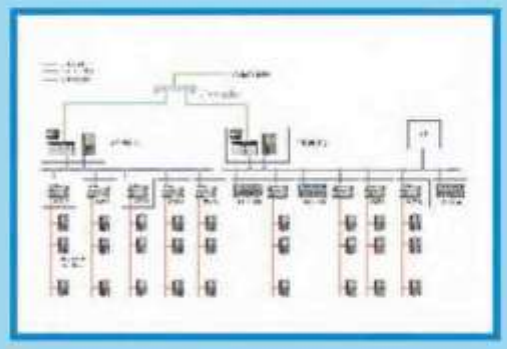

Distributed Control System

辽冶矿产集团
LMM GROUP

Baggage Handling System

Baggage Information Management System (BIMS)

Key Functions

- Integrating basic functions of large airports such as automatic baggage sorting resource management, high-speed sorting, early storage, path planning, data management, statistic reporting,system interface

System Features

- Meeting the need of airport with annual passenger throughput of 50 million /year
- Increasing the efficiency of baggage handling
- Information sharing among different systems

辽冶矿产集团
LMM GROUP

Baggage Handling System

RFID Radio Frequency Baggage Identification System

Key Functions

- Integrating the functions of tag printing, channel identification, baggage positioning , handheld scanning
- Applied in baggage sorting, baggage reconciliation, baggage location, and logistics management

System Features

- Technology of radio frequency identification baggage tracking data acquisition, information storage and processing
- Seamless integration of RFID technology and BHS

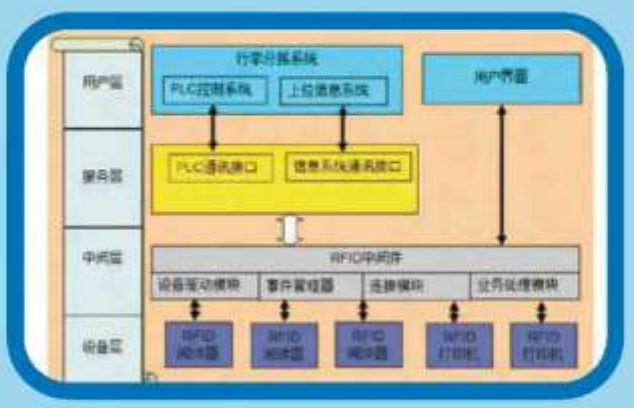

辽冶矿产集团
LMM GROUP

Enclosure Alarm System of Capacitance Disturbance

Input voltage	Single phase [illegible]
Leakage current	[illegible]
Rated input power	[illegible]
Output load protection	[illegible]
Output overvoltage protection	[illegible]
Digital interface	[illegible]
Switch interface	[illegible]
Alarm output	[illegible]
Working temperature and humidity	[illegible]


Alarm Controller Case


Alarm Controller

Emission pulse frequency	[illegible]
Emission pulse voltage	[illegible]
Defense range	[illegible]
Number of alarm detection cable	[illegible]
Distance between alarm detection cables	[illegible]
Laying Method of Alarm Detection Cable	[illegible]
Sensitivity adjustment range	[illegible]
Working temperature	[illegible]

System Features

- **High reliability** Accurate alarm, no omission
- **Few false alarm** Little influence by environment
- **High safety** Alarm cable pulse signal with low energy, harmless to the human body
- **High compatibility** Compatible with the meteorological and other types of alarm devices
- **Video linkage** Real time alarm linkage Video recording by camera
- **Voice communication** Voice communication between monitoring center and enclosure available
- **Easy to install** Suitable for all kinds of fences
- **Environment - friendly electromagnetic** No electromagnetic pollution

System Structure

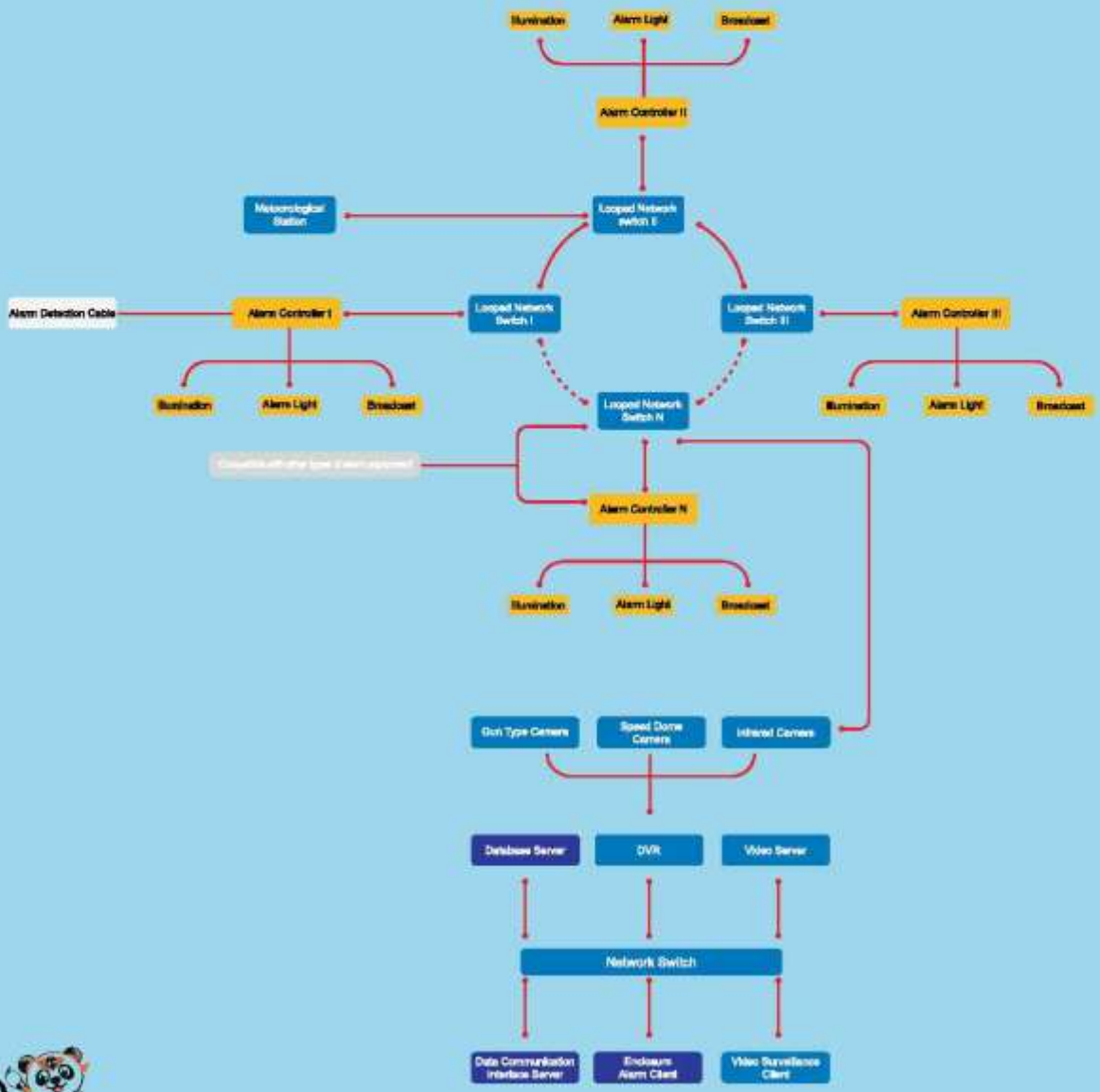

辽冶矿产集团
LMM GROUP

E-Pass

Airport Crossing Vehicle Safety Management System

Key Functions

- Vehicle identification management
- Automatic imaging of vehicle chassis
- Centralized monitoring

Key Tech

- Linear array scanning imagery technology
- Long-distance card identification technology based on RFID
- Vehicle license plate recognition technology based on image analysis

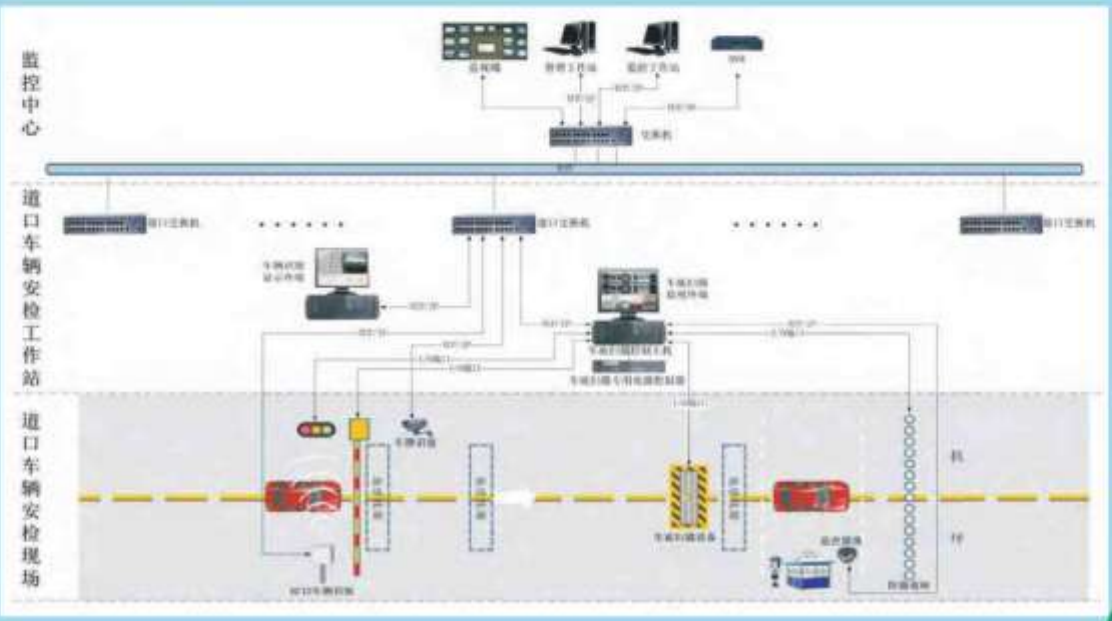

Major Components from the top brand names in the world.			
Belt:	Ammeraal	Curving Conveyer:	Transnorm
Motorized Pulley:	Interroll	PLC:	ORMON or Allen-Bradley
Electric Motor:	SEW Eurodrive	Server:	HP or IBM
Electronic Loadcell Scales:	Mettler-Toledo	Graphics Workstation:	HP or IBM
Laser Bar Code Scanners:	Accu-Sort	Workstation:	HP or IBM
Soft Starter:	Schneider	Transducer:	ABB
Photoelectric Detection Elements (containing connecting cable and components):		Schneider or SICK	
Electric Elements (Switch, Cocontactor, Breaker, Indicator Light, Wire Connecting Terminal and so on):		Schneider or Weidmuller	
Customers can easily find out such components from local market!			