辽冶矿产集团
LMM GROUP

Parts for Belt Conveyors

www.pathrosrep.com pathros@pathrosrep.com Teléfono 241-3023

Company Profile

INDEX

Product Certification 01
Roller Introduction 02
Overview 02
Roller Construction 03
Roller Product Range: 04
DM-RS Roller Construction 04
DM-LS Roller Construction 05
DM-NS Roller Construction 06
RKM Roller Features 07
Roller Production Work-Flow Chart 07
Product Quality Control and Testings 08
Roller Testing Equipment 08
Local Standard Roller Specifications: 09
Carry Roller 09
Return Roller 10
Carry Idler 11
Return Idler 12
Carry Impact Idler 13
Spiral Return Idler 14
Carry Training Idler 15
Flat Training Idler 16
Bi-Directional Carry Training Idler 17
Bi-Directional V-Return Training Idler 18
Trough Pivoting Wing Idler 19
V-Return Pivoting Wing Idler 20
Product List: 21
Local Standard Product List 21
Idlers List 21~22
Roller List 23
Special Rollers 24
Roller Frames 25
Conveyor Pulleys 26
Export Products 27~28
Local and Export Customer Example 29~30
Product Packaging and Delivery 31
Export History/Customer Reference 32

辽冶矿产集团
LMM GROUP

Product Certification

Roller Introduction

Overview

Conveyor roller is an important component, its role is to effectively support the conveyor belt and its material load to ensure stable operation of the conveyor system. Conveyor systems are required to serve an ever increasing transport volume, belt speeds and distance. This requires high quality Hi Speed Balanced rollers, suitable for today's heavy mining practices. We supply roller diameter of domestic standards such as: ¢ 60, ¢ 76, ¢ 89, ¢ 108, ¢ 133, ¢ 159, ¢ 194, ¢ 219; and also foreign standards such as: ¢ 63, ¢ 76, ¢ 80 , ¢ 89, ¢ 102, ¢ 114, ¢ 127, ¢ 139, ¢ 152, ¢ 165, ¢ 178, ¢ 190. The roller diameter is influenced principally by the belt speed and resulting Revolutions Per Minute(RPM). Generally for standard quality rollers a maximum speed of 750 RPM is allowable before out of balance creates problems. Speed above this are possible if rollers are machined and balanced.

www.pathrosrep.com pathros@pathrosrep.com Teléfono 241-3023

Roller Construction

Roller Tube

The roller tube is rolled from electric-resistance-welded, ERW 200 -350 Range tube using prime quality steel as per AS1450, BS 1387:1985, GB/T 13792-92 and other equivalent standards for conveyor tubing. Each shell end is precision machined to fit the end -housing to ensure concentricity.

Shafts

The shafts consist of cold drawn mild steel-polished round bars in accordance with JIS-G3123 SGD 3 and other equivalent standards. Black shafts -JIS-G 3101-SS400 equivalent to ASNZS3679 are Machined for "step-down" for respective bearing fitting. Particular attention is given to the bearing seat machining and seal location. Shaft Retention is positive using cir-clips at both ends to prevent shell "walking off" the shaft. This allows the rollers to be installed in the wing location in any orientation without fear of movement. The clearance at the cir-clips permits the "shaft -sliding" during expansion and contraction.

Bearing Housings

The end discs are fabricated from ASNZS1594, JIS-G-3131 -Pickled & Oiled-Coils or other equivalent standards. The fabrication of the End housing consists of a multi-stage precision automatic pressing operation, which provides such a high degree of accuracy for bearing and seal location. The idler shells and end housings are 3mm fully fillet welded in a special double-ended automatic circumferential welding machine, which gives a minimum of 70% weld penetration and ensures that the shell tubing is concentric at the ends during the welding process.

Roller Bearings

Rollers are fitted with single row deep groove ZZ type ball bearings with a C3 internal clearance unless otherwise specified. The bearings are factory greased for life and purged with shell alvania EP No. 1 lubricant, this offers minimum roller drag and gives maximum resistance to water wash out.

Roller Sealing

The bearings are protected on the external and the internal side of the roller by labyrinth seals greased with Shell Alvania-Extreme Pressure [EP]; Lead Free [LF] No:1 – Lithium Base lubricants that keep any foreign materials out. The various protective elements of our sealing systems provide a high level protection from foreign elements, ensuring bearing durability.

Roller Surface Treatment

End discs are solvent cleared prior to the roller being rotated through our descaling and scuffing machine, the end discs are then sprayed with one coat of standard enamel paint and the tube is then coated with anti-corrosive enamel. Shells can be hot dip galvanised and ends with corrosion protective system on request.

Roller Product Range

provides 3 series of conveyor rollers to cater the demands of varying types of applications. Each roller series are designed to ensure optimum performance, efficiency and durability.

DM-RS Roller Construction

DM-RS model is an extreme service roller. It is designed to protect the bearing in 3 different levels. It can be used on continuous heavy duty and high speed operation belt conveyors for dusty bulk materials conveyed in a hostile environment.

RS-chart

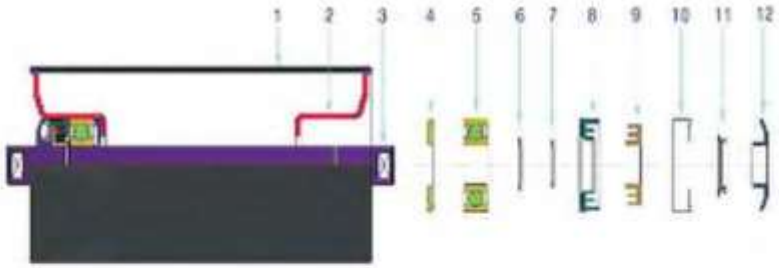

1.Roller Pipe 2.Bearing Housing 3.Shaft 4.Rear Seal 5.Bearing 6.Washer 7.Circlip 8.Labyrinth Seal-Female 9.Labyrinth Seal-Male 10.Cover cap 11.Outer Seal Ring 12. Outer Protective Shield

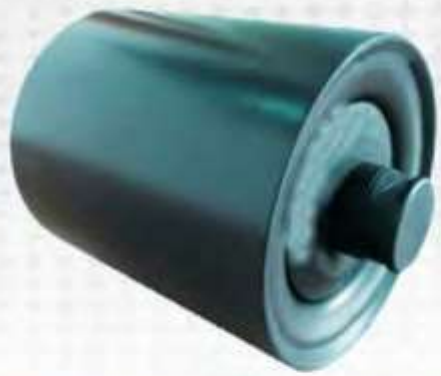

www.pathrosrep.com pathros@pathrosrep.com Teléfono 241-3023

DM-LS Roller Construction

DM-LS series is based on the domestic belt conveyor idlers DTII standard design. Bearings are sealed for life with the provision of a labyrinth seal, which provides a dustproof and waterproof roller in line with "GB/T10595-2009" quality standards. This roller is suitable for use in dusty environments.

LS-chart

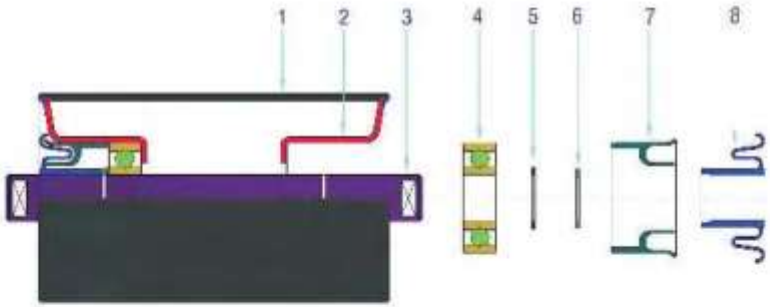

1.Roller Pipe 2.Bearing Housing 3.Shaft 4.Bearing 5.Washer 6.Circlip 7.Labyrinth Seal-Female 8.Labyrinth Seal-Male

DM-NS Roller Construction

DM-NS is a light-duty and affordable roller suitable for use in normal working environments. The cover cap and outer protective seal provides an effective dust protection for the bearings, thus ensuring the lifespan of the product.

NS-chart

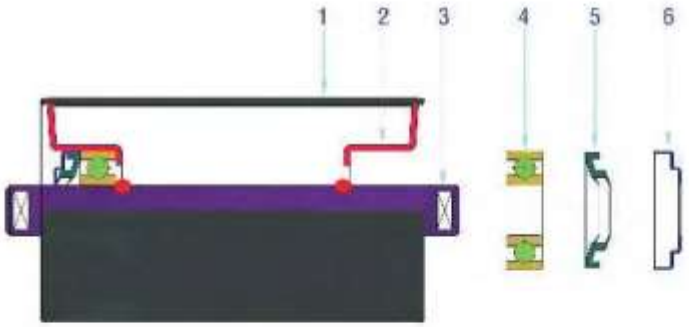

1.Roller Pipe 2.Bearing Housing 3.Shaft 4.Bearing 5.Outer Protective Shield 6.Cover Cap

RKM Roller Features

- Recessed welding, solid structure, suitable for use in a variety of heavy duty conveying system.
- Precision fabrication with CNC equipment, strict control of component tolerances and performance parameters higher than the national standard.
- Dustproof and waterproof design, exceptional sealing, self-lubricating and sealed for life.
- Low rotating friction, abrasion and corrosion resistance, smooth roller surface and energy efficient.
- Runout(TIR) kept to a minimum, dynamically balanced and low noise.
- Comply to GB, DIN, JIS, BS and other manufacturing standards.
- Long life in extreme working conditions with a minimum service life of not less than 30,000 hours. Failure rates not exceeding 5%.

Roller Production Work-Flow Chart

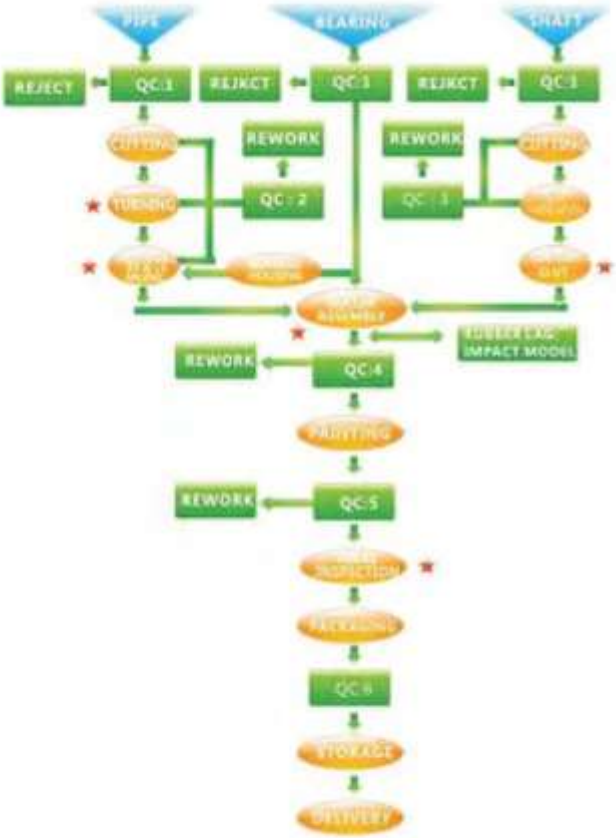

* CRITICAL STEP

Product Quality Control and Testings

To ensure our products are of the highest quality, we adhere to a strict quality control system and product testing. Our rollers are subjected to rigorous test such as **Shaft Angle Loading Test, Impact Test, Starting Torque Test, Dust Penetration Test, Water Immersion Test, TIR(Eccentricity) test, Coefficient of Friction Test, Dynamic Balancing.**

Shaft Angle Loading Test

Impact Test

Starting Torque Test

Dust Penetration Test

Water Immersion Test

TIR(Eccentricity) test

Coefficient of Friction Test

Dynamic Balancing

www.pathrosrep.com pathros@pathrosrep.com Teléfono 241-3023

Local Standard Roller Specifications

Carry Roller

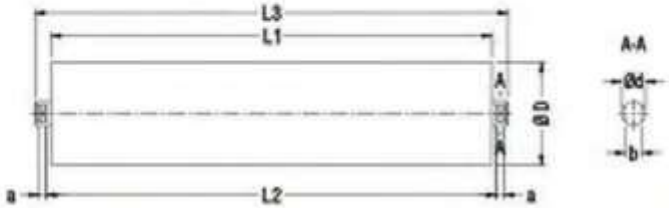

unit(mm)

Specifications	D	L	Carry Roller C1	L1	L2	b	a	L3	Mass of Rotating Parts (Kg)	Weight (kg)
Φ76-204-160	76	20	6204zz	160	170	14	6	188	1.41	2.09
Φ89-204-160	89			160	170			188	1.64	2.33
Φ89-204-200				200	210			228	1.89	2.68
Φ89-204-250				250	260			278	2.21	3.05
Φ89-204-315				315	325			343	2.62	3.69
Φ89-204-380				380	390			408	3.04	4.20
Φ108-205-200	108	25	6205zz	200	210	18	8	234	2.57	3.75
Φ108-205-250				250	260			284	3.02	4.39
Φ108-205-315				315	325			349	3.61	5.22
Φ108-205-380				380	390			414	4.20	6.06
Φ108-205-465				465	475			499	4.96	7.15
Φ108-205-530				530	540			564	5.55	7.98
Φ133-305-200	133	25	6305zz	200	210	18	8	234	3.62	4.88
Φ133-305-250				250	260			284	4.17	5.63
Φ133-305-315				315	325			349	4.90	6.60
Φ133-305-380				380	390			414	5.63	7.58
Φ133-305-465				465	475			499	6.58	8.85
Φ133-305-530				530	540			564	7.30	9.83
Φ133-305-600				600	610		11	642	8.09	10.91
Φ133-305-670				670	680			712	8.87	11.96
Φ133-305-750				750	760			792	9.76	13.16
Φ133-305-800				800	810			842	10.32	13.91
Φ159-306-200	159	30	6306zz	200	210	22	8	234	4.70	6.80
Φ159-306-250				250	260			284	5.73	7.84
Φ159-306-315				315	325			349	6.73	9.19
Φ159-306-380				380	390		8	414	7.72	10.54
Φ159-306-465				465	475			499	9.02	12.31
Φ159-306-530				530	540			564	10.01	13.66
Φ159-306-600				600	610		11	642	11.08	15.16
Φ159-306-670				670	680			712	12.15	16.62
Φ159-306-750				750	760			792	13.38	18.28
Φ159-306-800				800	810			842	14.14	19.32
Φ159-306-900				900	910			942	15.67	21.40
Φ159-306-950				950	960			992	16.43	22.44
Φ194-308-530	194	40	6308zz	530	540	32	13	578	17.96	24.50
Φ194-308-600				600	610			648	19.91	27.14
Φ194-308-670				670	680			718	21.86	29.77
Φ194-308-750				750	760			798	24.08	32.78
Φ194-308-800				800	810			848	25.47	34.66
Φ194-308-900				900	910			948	28.25	38.42
Φ194-308-950				950	960			998	29.65	40.30
Φ194-308-1050				1050	1060			1098	32.41	44.06
Φ194-308-1120				1120	1130			1168	34.37	46.70

Return Roller

unit(mm)

Specifications	D	L	Carry Roller C1	L1	L2	b	a	L3	Mass of Rotating Parts (Kg)	Weight (kg)
Φ76-204-500	76	20	6204zz	500	510	14	6	528	3.25	4.76
Φ89-204-500	89			500	510			528	3.74	5.26
Φ89-204-600				600	610			628	4.38	6.14
Φ89-204-750				750	760			778	5.33	7.47
Φ89-204-950				950	960			978	6.60	9.23
Φ89-204-1150				1150	1160			1178	7.88	10.99
Φ108-205-600	108	25	6205zz	600	610	18	8	634	6.20	8.90
Φ108-205-750				750	760			784	7.55	10.83
Φ108-205-950				950	960			984	9.36	13.40
Φ108-205-1150				1150	1160			1184	11.16	15.97
Φ108-205-1400				1400	1410			1434	13.42	19.18
Φ108-205-1600				1600	1610			1634	15.22	21.75
Φ133-305-600	133	25	6305zz	600	610	18	8	634	8.09	10.88
Φ133-305-750				750	760			784	9.76	13.13
Φ133-305-950				950	960			984	12.00	16.13
Φ133-305-1150				1150	1160			1184	14.23	19.13
Φ133-305-1400				1400	1410			1434	17.03	22.88
Φ133-305-1600				1600	1610			1634	19.26	25.88
Φ133-305-1800				1800	1810		11	1842	21.50	28.91
Φ133-305-2000				2000	2010			2042	23.73	31.91
Φ133-305-2200				2200	2210			2242	25.97	34.92
Φ133-305-2500				2500	2510			2542	29.32	39.42
Φ159-306-600	159	30	6306zz	600	610	22	8	634	12.08	15.12
Φ159-306-750				750	760			784	13.38	18.24
Φ159-306-950				950	960			984	16.43	22.40
Φ159-306-1150				1150	1160			1184	7.72	26.56
Φ159-306-1400				1400	1410			1434	9.02	31.76
Φ159-306-1600				1600	1610			1634	10.01	35.92
Φ159-306-1800				1800	1810		11	1842	11.08	40.12
Φ159-306-2000				2000	2010			2042	12.15	44.28
Φ159-306-2200				2200	2210			2242	13.38	48.44
Φ159-306-2500				2500	2510			2542	14.14	54.68
Φ159-306-2800				2800	2810			2842	15.67	60.92
Φ159-306-3000				3000	3010			3042	16.43	65.08
Φ194-308-1600	194	40	6308zz	1600	1610	32	13	1648	17.96	64.75
Φ194-308-1800				1800	1810			1848	19.91	72.27
Φ194-308-2000				2000	2010			2048	21.86	79.79
Φ194-308-2200				2200	2210			2248	24.08	87.32
Φ194-308-2500				2500	2510			2548	25.47	98.6
Φ194-308-2800				2800	2810			2848	28.25	109.89
Φ194-308-3000				3000	3010			3048	29.65	117.41
Φ194-308-3150				3150	3160			3198	32.43	123.05
Φ194-308-3350				3350	3360			3398	34.37	130.57

www.pathrosrep.com pathros@pathrosrep.com Teléfono 241-3023

Carry Idler

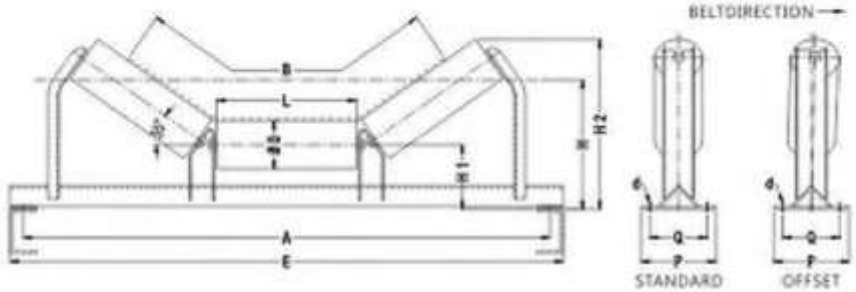

unit(mm)

Belt Width B	Model No	Roller			Bearing C3	A	E	H	H1	H2	P	Q	d	Weight (kg)
		Roller No	D	L										
500	B050-89-204	Φ89-204-200	89	200	6204zz	740	800	220	135.5	298	170	130	M12	15.8
650	B065-89-204	Φ89-204-250	89	250	6204zz	890	950	235	135.5	327	170	130	M12	17.7
	B065-108-205	Φ108-205-250	108		6205zz			265	146	346				22.1
800	B080-89-204	Φ89-204-315	89	315	6204zz	1090	1150	245	135.5	364	170	130	M12	22.8
	B080-108-205	Φ108-205-315	108		6205zz			270	146	383				27.8
1000	B100-108-205	Φ108-205-380	108	380	6205zz	1290	1350	300	159	437	220	170	M16	40.0
	B100-133-305	Φ133-305-380	133		6305zz			325	173.5	461				45.0
1200	B120-108-205	Φ108-205-465	108	465	6205zz	1540	1600	335	176	502	260	200	M16	53.2
	B120-133-305	Φ133-305-465	133		6305zz			360	190.5	527				58.8
	B120-159-306	Φ159-306-465	159		6306zz			390	207.5	556				70.5
1400	B140-108-205	Φ108-205-530	108	530	6205zz	1740	1800	350	184	548	280	220	M16	59.1
	B140-133-305	Φ133-305-530	133		6305zz			380	198.5	572				65.3
	B140-159-306	Φ159-306-530	159		6306zz			410	215.2	603				86.2
1600	B160-133-305	Φ133-305-600	133	600	6305zz	1980	2050	425	212.5	629	300	240	M16	101.25
	B160-159-306	Φ159-306-600	159		6306zz			450	225.5	655				104.85
	B160-194-308	Φ194-308-600	194		6308zz			485	246.5	674				154.45
1800	B180-133-305	Φ133-305-670	133	670	6305zz	2180	2250	440	212.5	670	340	270	M16	110.35
	B180-159-306	Φ159-306-670	159		6306zz			465	225.5	693				125.35
	B180-194-308	Φ194-308-670	194		6308zz			500	246.5	714				148.55
2000	B200-133-305	Φ133-305-750	133	750	6305zz	2420	2500	470	222.5	725	340	270	M16	129.22
	B200-159-306	Φ159-306-750	159		6306zz			495	235.5	749				152.92
	B200-194-308	Φ194-308-750	194		6308zz			530	252.5	783				199.22
2200	B220-159-306	Φ159-306-800	159	800	6306zz	2720	2800	515	235.5	778	340	270	M16	164.3
	B220-194-308	Φ194-308-800	194		6308zz			550	252.5	812				214.0
2400	B240-159-307	Φ159-307-900	159	900	6307zz	3020	3110	570	232.5	828	340	270	M20	230.7
	B240-194-308	Φ194-308-900	194		6308zz			620	265	878				258.1

Return Idler

unit(mm)

Belt Width B	Model No	Roller			Bearing C3	A	E	H	H1	P	Q	d	Weight (kg)
		Roller No	D	L									
500	B050-89-204	Φ89-204-600	89	600	6204zz	740	792	55.5	100	145	90	M12	9.45
650	B065-89-204	Φ89-204-750	89	750	6204zz	890	942	55.5	100	145	90	M12	10.75
	B065-108-205	Φ108-205-750	108		6205zz			55.5	109.5				14.25
800	B080-89-204	Φ89-204-950	89	950	6204zz	1090	1142	100	144.5	145	90	M12	13.35
	B080-108-205	Φ108-205-950	108		6205zz			100	154				17.85
	B080-133-305	Φ133-305-950	133		6305zz			100	166.5				20.65
1000	B100-108-205	Φ108-205-1150	108	1150	6205zz	1290	1342	110	164	150	90	M16	21.25
	B100-133-305	Φ133-305-1150	133		6305zz			110	176.5				24.55
	B100-159-306	Φ159-306-1150	159		6306zz			110	189.5				32.25
1200	B120-108-205	Φ108-205-1400	108	1400	6205zz	1540	1592	120	174	150	90	M16	24.82
	B120-133-305	Φ133-305-1400	133		6305zz			120	186.5				29.22
	B120-159-306	Φ159-306-1400	159		6306zz			120	199.5				38.42
1400	B140-108-205	Φ108-205-1600	108	1600	6205zz	1740	1800	130	184	150	90	M16	27.52
	B140-133-305	Φ133-305-1600	133		6305zz			130	196.5				32.02
	B140-159-306	Φ159-306-1600	159		6306zz			130	209.5				42.42
1600	B160-133-305	Φ133-305-1800	133	1800	6305zz	1980	2050	165	231.5	300	240	M16	52.15
	B160-159-306	Φ159-306-1800	159		6306zz			165	224.5				64.35
	B160-194-308	Φ194-308-1800	194		6308zz			165	262				99.85
1800	B180-133-305	Φ133-305-2000	133	2000	6305zz	2180	2250	170	236.5	340	270	M16	58.35
	B180-159-306	Φ159-306-2000	159		6306zz			170	249.5				71.85
	B180-194-308	Φ194-308-2000	194		6308zz			170	267				111.85
2000	B200-133-305	Φ133-305-2200	133	2200	6305zz	2420	2500	200	266.5	340	270	M16	63.02
	B200-159-306	Φ159-306-2200	159		6306zz			200	279.5				77.72
	B200-194-308	Φ194-308-2200	194		6308zz			200	297				118.52
2200	B220-159-306	Φ159-306-2500	159	2500	6306zz	2720	2800	215	294.5	340	270	M16	85.02
	B220-194-308	Φ194-308-2500	194		6308zz			215	312				131.82
2400	B240-159-308	Φ159-308-2800	159	2800	6308zz	3020	3110	230	309.5	340	270	M20	108.32
	B240-194-309	Φ194-309-2800	194		6309zz			230	327				156.52

www.pathrosrep.com pathros@pathrosrep.com Teléfono 241-3023

Carry Impact Idler

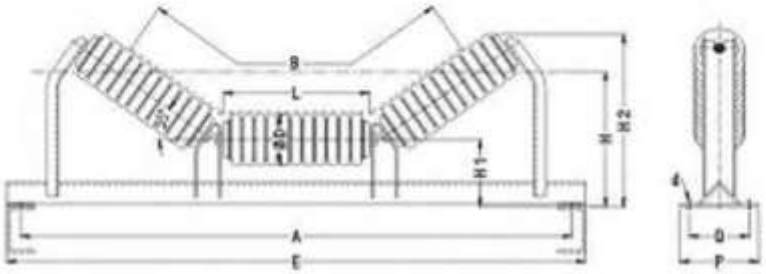

unit(mm)

Belt Width B	Model No.	Roller			Bearing C3	A	E	H	H1	H2	P	Q	d	Weight (kg)
		Roller No	D	L										
500	B050-89-204	Φ89-204-200	89	200	6204zz	740	800	220	135.5	298	170	110	M12	18.15
650	B065-89-204	Φ89-204-250	89	250	6204zz	890	950	235	135.5	327	170	110	M12	21.35
	B065-108-205	Φ108-205-250	108		6205zz			265	146	346				27.45
800	B080-89-204	Φ89-204-315	89	315	6204zz	1090	1150	245	135.5	364	170	110	M12	27.55
	B080-108-205	Φ108-205-315	108		6205zz			270	146	383				35.05
1000	B100-108-205	Φ108-205-380	108	380	6205zz	1290	1350	300	159	437	220	170	M14	49.25
	B100-133-305	Φ133-305-380	133		6305zz			325	173.5	461				55.25
1200	B120-108-205	Φ108-205-465	108	465	6205zz	1540	1600	335	176	502	260	200	M16	65.32
	B120-133-305	Φ133-305-465	133		6305zz			360	190.5	527				72.22
	B120-159-306	Φ159-306-465	159		6306zz			390	207.5	556				88.02
1400	B140-108-205	Φ108-205-530	108	530	6205zz	1740	1800	350	184	548	280	220	M16	73.02
	B140-133-305	Φ133-305-530	133		6305zz			380	198.5	573				77.42
	B140-159-306	Φ159-306-530	159		6306zz			410	215.2	603				106.32
1600	B160-133-305	Φ133-305-600	133	600	6305zz	1980	2050	425	212.5	629	300	240	M16	119.15
	B160-159-306	Φ159-306-600	159		6306zz			450	225.5	653				137.25
	B160-194-308	Φ194-308-600	194		6308zz			485	246.5	674				173.05
1800	B180-133-305	Φ133-305-670	133	670	6305zz	2180	2250	440	212.5	670	340	270	M16	130.65
	B180-159-306	Φ159-306-670	159		6306zz			465	225.5	691				150.45
	B180-194-308	Φ194-308-670	194		6308zz			500	246.5	714				187.95
2000	B200-133-305	Φ133-305-750	133	750	6305zz	2420	2500	470	222.5	725	340	270	M16	153.62
	B200-159-306	Φ159-306-750	159		6306zz			495	235.5	749				181.82
	B200-194-308	Φ194-308-750	194		6308zz			530	252.5	783				221.32
2200	B220-159-306	Φ159-306-800	159	800	6306zz	2720	2800	515	235.5	776	340	270	M16	194.52
	B220-194-308	Φ194-308-800	194		6308zz			550	252.5	812				239.82
2400	B240-159-307	Φ159-307-900	159	900	6307zz	3020	3110	570	232.5	828	340	270	M20	266.52
	B240-194-308	Φ194-308-900	194		6308zz			620	265	878				304.22

Spiral Return Idler

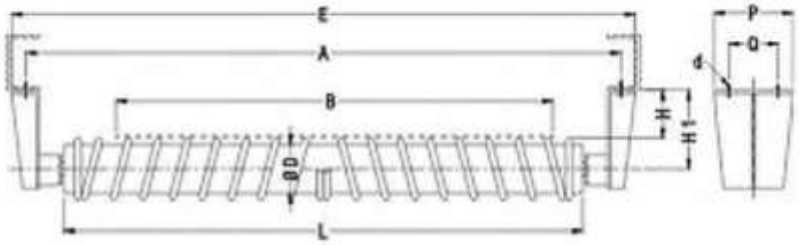

unit(mm)

Belt Width B	Model No.	Roller			Bearing C3	A	E	H	H1	P	Q	d	Weight (kg)
		Roller No	D	L									
500	B050-89-204	Φ89-204-600	89	600	6204zz	740	792	55.5	100	145	90	M12	16.75
650	B065-89-204	Φ89-204-750	89	750	6204zz	890	942	55.5	100	145	90	M12	19.85
	B065-108-205	Φ108-205-750	108		6205zz			55.5	109.5				20.25
800	B080-89-204	Φ89-204-950	89	950	6204zz	1090	1142	100	144.5	145	90	M12	24.95
	B080-108-205	Φ108-205-950	108		6205zz			100	154				25.65
	B080-133-305	Φ133-305-950	133		6305zz			100	166.5				29.85
1000	B100-108-205	Φ108-205-1150	108	1150	6205zz	1290	1342	110	164	150	90	M16	30.85
	B100-133-305	Φ133-305-1150	133		6305zz			110	176.5				34.55
	B100-159-306	Φ159-306-1150	159		6306zz			110	189.5				42.95
1200	B120-108-205	Φ108-205-1400	108	1400	6205zz	1540	1592	120	174	150	90	M16	36.32
	B120-133-305	Φ133-305-1400	133		6305zz			120	186.5				41.52
	B120-159-306	Φ159-306-1400	159		6306zz			120	199.5				51.52
1400	B140-108-205	Φ108-205-1600	108	1600	6205zz	1740	1800	130	184	190	90	M16	40.82
	B140-133-305	Φ133-305-1600	133		6305zz			130	196.5				46.12
	B140-159-306	Φ159-306-1600	159		6306zz			130	209.5				57.42
1600	B160-133-305	Φ133-305-1800	133	1800	6305zz	1980	2050	165	231.5	300	240	M16	68.75
	B160-159-306	Φ159-306-1800	159		6306zz			165	224.5				82.05
	B160-194-308	Φ194-308-1800	194		6308zz			165	262				101.35
1800	B180-133-305	Φ133-305-2000	133	2000	6305zz	2180	2250	170	236.5	340	270	M16	76.95
	B180-159-306	Φ159-306-2000	159		6306zz			170	249.5				91.65
	B180-194-308	Φ194-308-2000	194		6308zz			170	267				113.45
2000	B200-133-305	Φ133-305-2200	133	2200	6305zz	2420	2500	200	266.5	340	270	M16	83.52
	B200-159-306	Φ159-306-2200	159		6306zz			200	279.5				99.52
	B200-194-308	Φ194-308-2200	194		6308zz			200	297				120.22
2200	B220-159-306	Φ159-306-2500	159	2500	6306zz	2720	2800	215	294.5	340	270	M16	110.02
	B220-194-308	Φ194-308-2500	194		6308zz			215	312				134.02
2400	B240-159-308	Φ159-308-2800	159	2800	6308zz	3020	3110	230	309.5	340	270	M20	136.52
	B240-194-309	Φ194-309-2800	194		6309zz			230	327				158.92

www.pathrosrep.com pathros@pathrosrep.com Teléfono 241-3023

Carry Training Idler

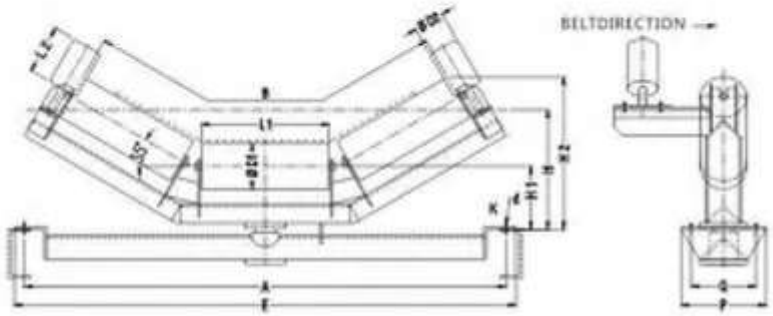

unit(mm)

Belt Width B	Model No	Roller			Bearing C3	D2	L2	A	E	H	H1	H2	P	Q	d	Weight (kg)
		Roller No	D	L												
500	B050-89-204	Φ89-204-200	89	200	6204zz	76	120	740	800	220	135.5	298	170	130	M12	24.35
650	B065-89-204	Φ89-204-250	89	250	6204zz	76	120	890	950	235	135.5	327	170	130	M12	27.75
	B065-108-205	Φ108-205-250	108		6205zz					265	146	346				31.75
800	B080-89-204	Φ89-204-315	89	315	6204zz	89	150	1090	1150	245	135.5	364	170	130	M12	36.55
	B080-108-205	Φ108-205-315	108		6205zz					270	146	383				41.25
1000	B100-108-205	Φ108-205-380	108	380	6205zz	89	150	1290	1350	300	159	437	220	170	M16	56.55
	B100-133-305	Φ133-305-380	133		6305zz					325	173.5	461				61.25
1200	B120-108-205	Φ108-205-465	108	465	6205zz	89	150	1540	1600	335	176	502	260	200	M16	68.92
	B120-133-305	Φ133-305-465	133		6305zz					360	190.5	527				74.22
	B120-159-306	Φ159-306-465	159		6306zz					390	207.5	556				84.82
1400	B140-108-205	Φ108-205-530	108	530	6205zz	108	180	1740	1800	350	184	548	280	220	M16	163.82
	B140-133-305	Φ133-305-530	133		6305zz					380	198.5	573				169.52
	B140-159-306	Φ159-306-530	159		6306zz					410	215.2	603				181.42
1600	B160-133-305	Φ133-305-600	133	600	6305zz	108	180	1980	2050	425	212.5	629	300	240	M16	158.35
	B160-159-306	Φ159-306-600	159		6306zz					450	225.5	653				171.45
	B160-194-308	Φ194-308-600	194		6308zz					485	246.5	674				211.15
1800	B180-133-305	Φ133-305-670	133	670	6305zz	108	180	2180	2250	440	212.5	670	340	270	M16	188.05
	B180-159-306	Φ159-306-670	159		6306zz					465	225.5	693				202.45
	B180-194-308	Φ194-308-670	194		6308zz					500	246.5	714				245.95
2000	B200-133-305	Φ133-305-750	133	750	6305zz	108	180	2420	2500	470	222.5	725	340	270	M16	219.22
	B200-159-306	Φ159-306-750	159		6306zz					495	235.5	749				235.02
	B200-194-308	Φ194-308-750	194		6308zz					530	252.5	783				280.72
2200	B220-159-306	Φ159-306-800	159	800	6306zz	108	180	2720	2800	515	235.5	778	340	270	M16	321.0
	B220-194-308	Φ194-308-800	194		6308zz					550	252.5	812				369.2
2400	B240-159-307	Φ159-307-900	159	900	6307zz	108	180	3020	3110	570	232.5	828	340	270	M20	360.3
	B240-194-308	Φ194-308-900	194		6308zz					620	265	878				405.7

Flat Training Idler

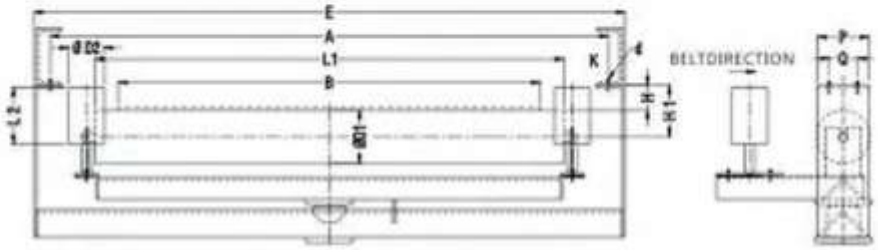

unit(mm)

Belt Width B	Model No	Roller			Bearing C3	D2	L2	A	E	H	H1	P	Q	d	Weight (kg)
		Roller No	D1	L1											
500	B050-89-204	Φ89-204-600	89	600	6204zz	76	120	740	800	55.5	100	170	130	M12	26.85
650	B065-89-204	Φ89-204-750	89	750	6204zz	76	120	890	950	55.5	100	170	130	M12	28.75
	B065-108-205	Φ108-205-750	108		6205zz					55.5	109.5				33.15
800	B080-89-204	Φ89-204-950	89	950	6204zz	89	150	1090	1150	100	144.5	170	130	M12	36.65
	B080-108-205	Φ108-205-950	108		6205zz					100	145				40.85
1000	B100-108-205	Φ108-205-1150	108	1150	6205zz	89	150	1290	1350	110	164	220	170	M16	55.85
	B100-133-305	Φ133-305-1150	133		6305zz					110	176.5				59.05
1200	B120-108-205	Φ108-205-1400	108	1400	6205zz	89	150	1540	1600	120	174	260	200	M16	73.42
	B120-133-305	Φ133-305-1400	133		6305zz					120	186.5				77.22
	B120-159-306	Φ159-306-1400	159		6306zz					120	199.5				86.32
1400	B140-108-205	Φ108-205-1600	108	1600	6205zz	108	180	1740	1800	130	184	280	220	M16	109.42
	B140-133-305	Φ133-305-1600	133		6305zz					130	196.5				113.72
	B140-159-306	Φ159-306-1600	159		6306zz					130	209.5				123.72
1600	B160-133-305	Φ133-305-1800	133	1800	6305zz	108	180	1980	2050	165	231.5	300	240	M16	133.45
	B160-159-306	Φ159-306-1800	159		6306zz					165	244.5				147.55
	B160-194-308	Φ194-308-1800	194		6308zz					165	262				188.85
1800	B180-133-305	Φ133-305-2000	133	2000	6305zz	108	180	2180	2250	170	236.5	340	270	M16	160.45
	B180-159-306	Φ159-306-2000	159		6306zz					170	249.5				181.65
	B180-194-308	Φ194-308-2000	194		6308zz					170	267				219.15
2000	B200-133-305	Φ133-305-2200	133	2200	6305zz	108	180	2420	2500	200	266.5	340	270	M16	174.82
	B200-159-306	Φ159-306-2200	159		6306zz					200	279.5				188.32
	B200-194-308	Φ194-308-2200	194		6308zz					200	297				227.62
2200	B220-159-306	Φ159-306-2500	159	2500	6306zz	108	180	2720	2800	215	294.5	340	270	M16	280.92
	B220-194-308	Φ194-308-2500	194		6308zz					215	312				335.02
2400	B240-159-307	Φ159-307-2800	159	2800	6307zz	108	180	3020	3110	230	309.5	340	270	M20	331.12
	B240-194-308	Φ194-308-2800	194		6308zz					230	327				372.82

www.pathrosrep.com pathros@pathrosrep.com Teléfono 241-3023

Bi-Directional Carry Training Idler

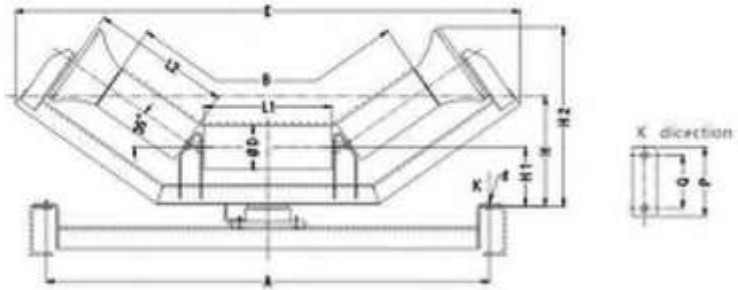

unit(mm)

Belt Width B	Model No	Friction Roller Type	Centre Roller Type	D	L1	L2	A	E	H	H1	H2	Bearing C3	P	Q	d	Weight (kg)
500	B050-89-204	Φ89-204-230	CR-RS-89-204-200	89	200	230	740	912	239	135.5	346.5	6204zz	170	130	M12	48.25
650	B065-89-204	Φ89-204-280	CR-RS-89-204-250	89	250	280	890	1055	239	135.5	375	6204zz	170	130	M12	51.75
	B065-108-205	Φ108-205-284	CR-RS-108-205-250	108		294		1180	245	146		6205zz				53.85
800	B080-89-204	Φ89-204-323	CR-RS-89-204-315	89	315	323	1090	1183	245	135.5	408	6204zz	170	130	M12	54.65
	B080-108-205	Φ108-205-342	CR-RS-108-205-315	108		342		1243	278	146	448	6205zz				71.25
	B080-133-305	Φ133-305-344	CR-RS-133-305-315	133		348		1276	305	159.5	471	6305zz				93.9
1000	B100-108-205	Φ108-205-405	CR-RS-108-205-380	108	380	405	1290	1439	300	159	487.5	6205zz	220	170	M16	85.95
	B100-133-305	Φ133-305-412	CR-RS-133-305-380	133		412		1520	325	173.5	505	6305zz				107.75
	B100-159-306	Φ159-306-429	CR-RS-159-306-380	159		429		1535	370	180.5	564	6306zz				138.45
1200	B120-108-205	Φ108-205-465	CR-RS-108-205-465	108	465	465	1560	1639	315	176	544	6205zz	260	200	M16	100.92
	B120-133-305	Φ133-305-473	CR-RS-133-305-465	133		473		1715	360	180.5	590	6305zz				120.42
	B120-159-306	Φ159-306-494	CR-RS-159-306-465	159		494		1717	390	207.5	607	6306zz				121.82
1400	B140-108-205	Φ108-205-533	CR-RS-108-205-530	108	530	533	1740	1824	350	184	590	6205zz	280	220	M16	132.62
	B140-133-305	Φ133-305-540	CR-RS-133-305-530	133		540		1887	382	198.5	615	6305zz				133.12
	B140-159-306	Φ159-306-553	CR-RS-159-306-530	159		553		1954	433	205.5	640	6306zz				136.82
1600	B160-159-306	Φ159-306-630	CR-RS-159-306-600	159	600	630	1980	2050	450	247	780	6306zz	300	240	M16	180.05
	B160-159-308	Φ159-308-630	CR-RS-159-308-600	159				2050	450	247	780	6308zz				184.95

Bi-Directional V-Return Training Idler

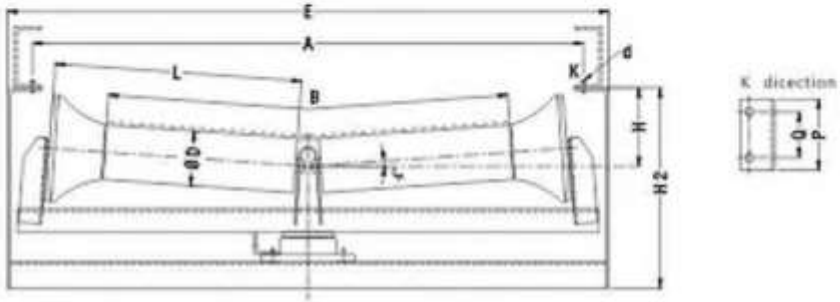

unit(mm)

Belt Width B	Model No	Roller			Bearing C3	A	E	H	H2	P	Q	d	Weight (kg)
		Roller No	D	L									
500	B050-89-204	Φ89-204-323	89	323	6204zz	740	840	55.5	334	130	90	M12	50.65
650	B065-89-204	Φ89-204-398	89	398	6204zz	890	990	55.5	323	130	90	M12	54.55
	B065-108-205	Φ108-205-398	108		6205zz				358.5				66.65
800	B080-89-204	Φ89-204-473	89	473	6204zz	1090	1190	100	367.5	130	90	M12	60.45
	B080-108-205	Φ108-205-488	108	488	6205zz				396				74.55
	B080-133-305	Φ133-305-488	133		6305zz								90.25
1000	B100-108-205	Φ108-205-590	108	590	6205zz	1290	1376	110	411	130	90	M16	87.75
	B100-133-305	Φ133-305-590	133		6305zz				443.5				104.55
	B100-159-306	Φ159-306-599	159	599	6306zz				476.5				108.85
1200	B120-108-205	Φ108-205-690	108	690	6205zz	1540	1626	120	426	130	90	M16	94.22
	B120-133-305	Φ133-305-690	133		6305zz				460.5				114.22
	B120-159-306	Φ159-306-699	159	699	6306zz				520				125.72
1400	B140-108-205	Φ108-205-790	108	790	6205zz	1740	1826	130	441	130	90	M16	100.02
	B140-133-305	Φ133-305-790	133		6305zz				463.5				124.82
	B140-159-306	Φ159-306-799	159	799	6306zz				527.5				155.72

www.pathrosrep.com pathros@pathrosrep.com Teléfono 241-3023

Trough Pivoting Wing Idler

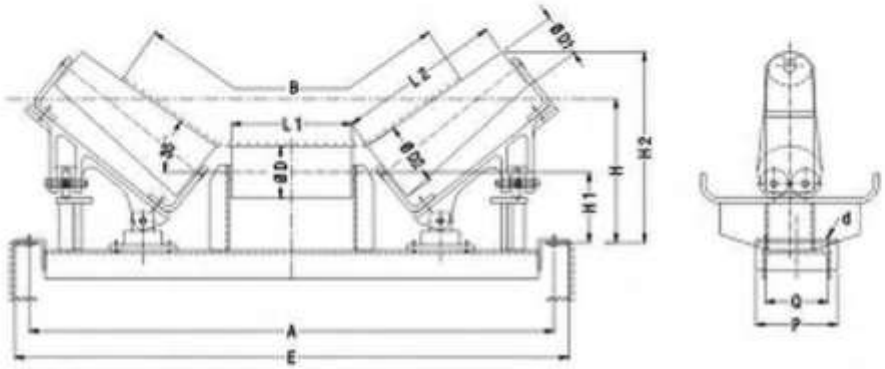

unit(mm)

Belt Width B	Model No	Friction Roller Type	Centre Roller Type	D	D1	D2	A	E	H	L1	L2	Bearing C3	P	Q	d	Weight (kg)
800	B080-108-205	Φ89(133)-205-340	CR-RS-108-205-250	108	89	133	1090	1150	1150	250	340	6205zz	170	130	M12	71.05
	B080-133-305	Φ108(159)-205-340	CR-RS-133-305-450	133	108	159						6305zz				71.25
1000	B100-133-305	Φ108(159)-305-415	CR-RS-133-305-315	133	108	159	1290	1350	1350	315	415	6305zz	220	170	M16	73.05
	B100-159-306	Φ108(159)-306-415	CR-RS-159-306-315	159	108	159						6306zz				91.65
1200	B120-133-305	Φ108(176)-305-500	CR-RS-133-305-380	133	108	176	1540	1600	1600	380	500	6305zz	260	200	M16	105.72
	B120-159-306	Φ133(194)-306-500	CR-RS-159-306-380	159	133	194						6306zz				109.62
1400	B140-133-305	Φ108(176)-305-550	CR-RS-133-305-465	133	108	176	1740	1800	1800	465	550	6305zz	280	220	M16	99.92
	B140-159-306	Φ133(194)-306-550	CR-RS-159-306-465	159	133	194						6306zz				110.22
1600	B160-159-307	Φ133(219)-307-600	CR-RS-159-307-530	159	133	219	1980	2050	2050	530	600	6307zz	300	240	M16	194.65
	B160-159-308	Φ133(219)-308-600	CR-RS-159-308-530									6308zz				199.75
1800	B180-159-307	Φ133(219)-307-670	CR-RS-159-307-600	159	133	219	2180	2250	2250	600	670	6307zz	340	270	M16	226.25
	B180-159-308	Φ133(219)-308-670	CR-RS-159-308-600									6308zz				229.35

V-Return Pivoting Wing Idler

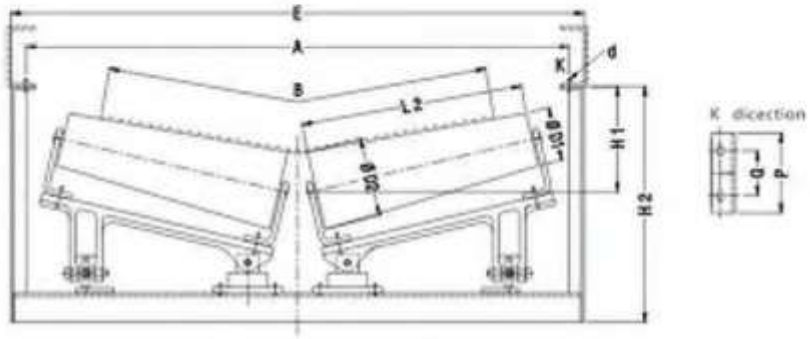

unit(mm)

Belt Width B	Model No	Roller / Roller No	D1	L2	Bearing C3	L	A	E	H1	H2	P	Q	d	Weight (kg)
800	B080-108-305	Φ108(159)-305-445	108	159	6305zz	445	1090	1150	217	452	160	90	M12	72.45
1000	B100-108-305	Φ108(176)-305-560	108	176	6305zz	560	1290	1350	254	532	160	90	M16	84.05
1200	B120-108-306	Φ108(194)-306-680	108	194	6306zz	680	1540	1600	272	557	180	90	M16	92.02
1400	B140-108-306	Φ108(194)-306-780	108	194	6306zz	780	1740	1800	291	578	180	90	M16	121.42
1600	B160-133-308	Φ133(219)-308-880	133	219	6308zz	880	1980	2050	326	613	300	240	M16	162.75
1800	B180-133-308	Φ133(219)-308-980	133	219	6308zz	980	2180	2250	331	618	300	240	M16	192.55

www.pathrosrep.com pathros@pathrosrep.com Teléfono 241-3023

Product List

We currently supply belt conveyor accessories with belt width up to 2400mm, roller diameter up to Φ219mm and shaft diameter up to Φ60mm. Our products can be manufactured to GB, DIN, JIS, BS and other international standards.

Local Standard Product List

Idlers List

Trough Idler

Trough Offset Idler

Transition Idler

Impact Idler

Impact Idler with dampers

Adjustable Transition Idlers

Trough Training Idler

Return Training Idler

5 roll Idler set

辽冶矿产集团 LMM GROUP

Idlers List

Bi-Directional Trough Training Idler

Bi-Directional V-Return Training Idler

Bi-Directional Flat Return Training Idler

Trough Pivoting Wing Idler

V-Return Pivoting Wing Idler

Flat Return Idler

V-Return Rubber Disc Idler

V-Return Idler

Inverted V-Return Idler

Flat Return Rubber Disc Idler

Flat Return Idler

Flat Return Spiral Roller Idler

www.pathrosrep.com pathros@pathrosrep.com Teléfono 241-3023

Roller List

Carry Roller

Return Roller

V Return Roller

Impact Roller

Spiral Roller

Rubber Disc Roller

Friction Roller

Flat Return Friction Roller

Tapered Roller

Guide Roller

Anti-Deviation Roller

Light Duty Roller

辽冶矿产集团
LMM GROUP

Special Rollers

Aluminium Heavy Duty Light Weight Roller

Plastic Overmould Rollers

UHMWPE Roller

Nylon Rollers

Galvanised Rollers

Ceramic Lagged Rollers

Rubber Lagged Rollers

Stainless Steel Roller

www.pathrosrep.com pathros@pathrosrep.com Teléfono 241-3023

Roller Frames

Painted Frames

Hot-Dip Galvanised Frames

Anti-Corrosive Paint Frames

Powder-Coated Frame

Powder-Coated Frame

Belt Scale frames

Hangars

Off-Spec Self Aligning Frames

辽冶矿产集团 LMM GROUP

Conveyor Pulleys

Drive Pulley

Machined Surface Pulley

Ceramic Lagged Pulley

Bend Pulley

Polyurethane Rubber Pulley

Rubber Lagged Pulley

1 Cage Pulley

2 Cage Pulley

www.pathrosrep.com pathros@pathrosrep.com Teléfono 241-3023

Export Products

Aluminium Rollers

Waterproof Roller

Rio Tinto Low-Noise Rollers

Poly Rollers

Belt Scale Rollers

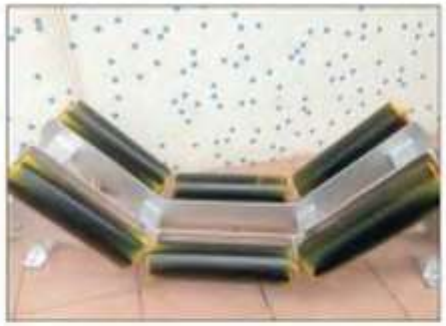

Australian Standard Jack-down Idlers

辽冶矿产集团 LMM GROUP

Export Products

FMG Hot-Dip Galvanised Frames

Hot-Dip Galvanised Trough Frames

South African Standard Frames

Malaysian Standard Frames

Belt Scale Weights

Fixed Drive Sprocket Roller

www.pathrosrep.com pathros@pathrosrep.com Teléfono 241-3023

Product Packaging and Delivery

Packaging is supplied in a way that it is safe for handling and unpacking at its destination. It is manufactured for overseas transport. Customised packaging is available upon request.

Export History/Customer Reference

Foreign Customers

Country	Customer	Site
Australia	BHP Billiton	Cerrington Mine
Australia	Rio Tinto	Pilbara Iron
Australia	Fortescue Metals Group Ltd	Port Hedland
Australia	Macquarie Generation	Bayswater Power Station
Australia	Xstrata Coal	Centenial Coal Mine
Australia	Xstrata Coal	Macquarie Coal Plant
Malaysia	Perwaja Steel	Perwaja Steel Mill
Malaysia	Johor Port Berhad	Johor Port Malaysia
Malaysia	Lafarge Malaysia Berhad	Rawang Cement Plant
Philippines	National Power Corp	Naga Power Plant
Thailand	Siam Cement Group	Siam Cement Kang Kong
Thailand	EGAT	EGAT Power Plant
Hong Kong	CLP Power Hong Kong	Power station
Myanmar	MSP Limited	Crushing Plant
Indonesia	YTL Cement	Cement Plant
Indonesia	PLCement Padang	Cement Plant
Algeria	Cojaal	Crushing Plant
Papua New Guinea	Lihir Gold Mine	GoldMine

Domestic Customers

Site	Customer	Site
Zhanjiang, Gangdong	Zhangjiang Port Group Co. Ltd	Port
FangCheng, Guangxi	FangCheng Port Group Co. Ltd	Port
Shantou, Guangdong	Shantou Port Group Ltd	Port
Guangzhou, Guangdong	Guangzhu Gang Xi Ji Gang Port	Port
Shenzhen, Guangdong	Shenzhen Chiwan Wharf Holdings Ltd	Port
Dongguan, Guangdong	Dongguan Humen Sha Jiao JLC Plant	Power Plant
Yunfu, Guangdong	Yunfu Power Plant	Power Plant
Jieyang, Guangdong	Jingha Power Generation Co, Ltd	Power Plant
Shantou, Guangdong	Huaneng Haimen Power Plant	Power Plant
Guigang, Guangxi	Huadian Power Co, Ltd	Power Plant
Taishan, Guangdong	Yuedian Taishan Power Co, Ltd.	Power Plant
Guangzhou, Guangdong	Wangtong Redian Co, Ltd.	Power Plant
Jixi, Heilongjiang	Datang Thermal Power Co, Ltd	Power Plant
Xuzhou, Jiangsu	Zamore Electric Co, Ltd.	Belt Scales
Dongguan, Guangdong	China Resources Cement	Cement Plant
Guigang, Guangxi	China Resources Cement	Cement Plant
Guigang, Guangxi	TCC Guigang Cement	Cement Plant
Chongyi, Jiangxi	Chongyi Zhangyuan Tungsten Co,Ltd	Tungsten
Pingshuo, Shanxi	China Coal Group Shanxi GOuan Energy Ltd	Coal
Zhuhai, Guangdong	Zhuhai YueyuAng Steel	Steel mill

www.pathrosrep.com pathros@pathrosrep.com Teléfono 241-3023